

TECHNICAL GUIDE CHAINster

50 HZ

24.10.2016

- - - -

SWF Krantechnik GmbH
Postbox 310410
68264 Mannheim
Germany

Boehringerstraße 4
68307 Mannheim
Germany

tel +49(0)621 789-900
fax +49(0)621 789 90-100
Info@swfkrantechnik.com
www.swfkrantechnik.com

This document and the information contained herein, is the exclusive property of SWF Krantechnik GmbH and represents a non-public, confidential and proprietary trade secret that may not be reproduced, disclosed to third parties, altered or otherwise employed in any manner whatsoever without the express written consent of SWF Krantechnik GmbH. Copyright © (2013) SWF Krantechnik GmbH. All rights reserved.

DOCISOTAPA90100-0 PS23448 13.5.2016

Table of contents

1 UPDATE HISTORY....4
2 INTRODUCTION....5
2.1 About this manual....5
2.1.1 Use of the manual....5
2.2 About this product....6
2.2.1 Product range....6
2.2.2 Technical regulations....7
2.2.3 Sound intensity level....7
2.2.4 Hoist weight....8
3 PRODUCT CODE EXAMPLE (FACTORY CODE) [SWF: CHAINSTER, FACTORY: K]....9
4 PRODUCT DESCRIPTION....10
4.1 Functional description of electrical chain hoist....10
4.2 Identifying key parts of the hoist....11
4.3 Features....13
4.3.1 Standard features....13
4.3.2 Optional features....14
5 MAIN COMPONENTS....16
5.1 Hoisting motor....16
5.1 Hoisting gear....17
5.2 Electrics....18
5.2.1 Cable inputs....18
5.2.2 Wiring principle....20
5.3 Hoisting brakes....22
5.3.1 Single brake....22
5.3.2 Double brake (option)....23
5.3.3 Manual brake release (option)....25
5.3.4 Brake coil voltages and resistance....26
5.4 Overload device: Friction torque limiter....27
5.5 Limit switch: Rotating geared limit switch....29
5.5.1 Functional description of the rotating geared limit switch....31
5.5.2 Rotating geared limit switch types....32
5.5.3 Operational limits....32
5.6 Chain reeving components....33
5.6.1 Chain sprocket....34
5.6.2 Return sprocket....35
5.7 Hoist suspension type....36
5.7.1 Eye suspension....36
5.7.2 Suspension hook....37
5.7.3 Coupling part....38
5.7.4 Stationary (fixed) suspension (option)....38
5.8 Lifting hooks....39
5.8.1 Lower hook....39
5.8.2 Safety hook / self-locking hook (option)....41
5.8.3 Stainless steel hook....42
5.9 Hook blocks....43
5.9.1 Single fall hook blocks....43
5.9.2 Two-fall hook blocks....44
5.9.3 Stainless steel hook block (option)....46
5.10 Hand control on hook feature (option)....47
5.11 Hoisting chains....48
5.11.1 Safety factors for chains....48
5.11.2 Chain technical data....48

This document and the information contained herein, is the exclusive property of SWF Krantechnik GmbH and represents a non-public, confidential and proprietary trade secret that may not be reproduced, disclosed to third parties, altered or otherwise employed in any manner whatsoever without the express written consent of SWF Krantechnik GmbH. Copyright © (2013) SWF Krantechnik GmbH. All rights reserved.

5.11.3 Chain bags 50
5.12 Traveling motors 51
5.12.1 Inverter motor data 52
5.12.2 Two-speed motor data 53
5.13 Trolley constructions 54
5.13.1 Trolley fixation types 54
5.13.2 Trolley constructions 56
6 LUBRICATION 58
6.1 Lubrication charts 58
6.2 Lubricant information 59
7 LIST OF MATERIALS AND COATINGS 61
8 LOAD RANGE AND DUTY CLASSES 62
8.1 Hoist classifications 62

This document and the information contained herein, is the exclusive property of SWF Krantechnik GmbH and represents a non-public, confidential and proprietary trade secret that may not be reproduced, disclosed to third parties, altered or otherwise employed in any manner whatsoever without the express written consent of SWF Krantechnik GmbH. Copyright © (2013) SWF Krantechnik GmbH. All rights reserved.

1 UPDATE HISTORY

Section	Changes	Date	Handled by
All	New tech guide version for FL created and published	03/2016	ISOTAPA

2 INTRODUCTION

2.1 About this manual

2.1.1 Use of the manual

This manual presents the product range and the features as well as the functional description of an electrical chain hoist, the Facelift version.

This manual helps to provide the following:

- Range of use of the different hoist types, loads and hoisting speeds
- Standards considered in the design of the product
- List of features available for the range of these hoists, as well as technical details about the product.

This document and the information contained herein, is the exclusive property of SWF Krantechnik GmbH and represents a non-public, confidential and proprietary trade secret that may not be reproduced, disclosed to third parties, altered or otherwise employed in any manner whatsoever without the express written consent of SWF Krantechnik GmbH. Copyright © (2013) SWF Krantechnik GmbH. All rights reserved.

2.2 About this product

2.2.1 Product range

Load [kg]	Frame size	Falls	Duty group ISO	Chain size	Gear life [h]	Motor type	Motor power HS [kW]	Hoisting speed [m/min.] HS/LS		Max. amb. temp [°C][1]		ED%[2],[3]	Starts/hour
63	CA1	1	M6	4 x 11	3200	MT07CA104	0.45	8	2	40	1)	50	300
	CA1	1	M6	4 x 11	3200	MT07CA104	0.45	10	2.5	40	1)	50	300
	CA1	1	M6	4 x 11	3200	MT07CA104	0.45	16	4	40	1)	50	300
	CA1	1	M6	4 x 11	3200	MT07CA104	0.45	20	5	40	1)	50	300
125	CA1	1	M6	4 x 11	3200	MT07CA104	0.45	8	2	40	1)	50	300
	CA1	1	M6	4 x 11	3200	MT07CA104	0.45	10	2.5	40	1)	50	300
	CA1	1	M5	4 x 11	1600	MT07CA104	0.45	16	4	40	1)	50	300
	CA1	1	M4	4 x 11	800	MT07CA104	0.45	20	5	40		30	180
160	CA1	1	M6	4 x 11	3200	MT07CA104	0.45	8	2	40	1)	50	300
	CA1	1	M6	4 x 11	3200	MT07CA104	0.45	10	2.5	40	1)	50	300
	CA1	1	M4	4 x 11	800	MT07CA104	0.45	16	4	40		30	180
250	CA1	1	M5	4 x 11	1600	MT07CA104	0.45	8	2	40	1)	50	300
	CA1	1	M4	4 x 11	800	MT07CA104	0.45	10	2.5	40		30	180
	CB1	1	M6	5 x 14	3200	MT08CA206	0.45	4	1.3	40		50	300
	CB1	1	M6	5 x 14	3200	MT08CA106	0.9	8	1.3	40		50	300
	CB1	1	M5	5 x 14	1600	MT08CA106	0.9	16	2.6	40	1)	50	300
	CB1	1	M4	5 x 14	800	MT08CA106	0.9	20	3.2	40		30	180
320	CA1	1	M4	4 x 11	800	MT07CA104	0.45	8	2	40		30	180
	CB1	1	M4	5 x 14	800	MT08CA106	0.9	16	2.7	40		30	180
500	CA1	2	M5	4 x 11	1600	MT07CA104	0,45	4	1	40		50	300
	CB1	1	M5	5 x 14	1600	MT08CA206	0.45	4	1.3	40	1)	50	300
	CC1	1	M6	7 x 20	3200	MT10CA206	0.9	4	1.3	40		50	300
	CB1	1	M5	5 x 14	1600	MT08CA106	0.9	8	1.3	40	1)	50	300
	CC1	1	M6	7 x 20	3200	MT10CA106	1.8	8	1.3	40		50	300
	CB1	1	M4	5 x 14	800	MT08CA106	0.45	10	1.6	40		30	180
	CC1	1	M5	7 x 20	1600	MT10CA106	1.8	16	2.6	40		50	300
	CC1	1	M4	7 x 20	800	MT10CA106	1.8	20	3.2	40		30	180
630	CB1	1	M4	5 x 14	800	MT08CA206	0.45	4	1.3	40		30	180
	CB1	1	M4	5 x 14	800	MT08CA106	0.9	8	1.3	40		30	180
	CC1	1	M4	7 x 20	800	MT10CA106	1.8	16	2.6	40		30	180
800	CD	1	M6	9 x 27	3200	MT10CB106	2.3	16	2.6	40	1)	50	300
1000	CB1	2	M5	5 x 14	3200	MT08CA106	0.9	4	0.7	40		50	300
	CC1	1	M5	7 x 20	1600	MT10CA206	0.9	4	1.3	40	1)	50	300
	CC1	2	M6	7 x 20	3200	MT10CA106	1.8	4	0.7	40	1)	50	300
	CC1	1	M5	7 x 20	1600	MT10CA106	1.8	8	1.3	40	1)	50	300
	CC1	1	M4	7 x 20	800	MT10CA106	1.8	10	1.6	40		30	180
	CD	1	M5/M6[4]	9 x 27	3200	MT10CB106	2.3	12.5	2	40	1)	50	300
	CE	1	M5/M6[4]	11.3x31	3200	MT10CC106	3.6	16	2.6	40	1)	50	300
	CE	1	M5/M6[4]	11.3x31	3200	MT10CC106	3.6	20	3.3	40	1)	50	300
1250	CC1	1	M4	7 x 20	1600	MT10CA206	0.9	4	1.3	40		30	180
	CC1	1	M4	7 x 20	800	MT10CA106	1.8	8	1.3	40		30	180
	CD	1	M6	9 x 27	1600	MT10CB106	2.3	8	1.3	40	1)	50	300
	CE	1	M6[4]	11.3x31	3200	MT10CC106	3.6	16	2.6	40	1)	50	300
1600	CC1	2	M5	7 x 20	800	MT10CA106	0.9	4	0.7	40		30	180
	CC1	2	M5	7 x 20	800	MT10CA106	1.8	5	0.8	40		30	180
	CD	1	M5	9 x 27	1600	MT10CB106	2.3	8	1.3	40	1)	50	300
	CE	1	M6	11.3x31	3200	MT10CC106	3.6	12.5	2	40	1)	50	300
2000	CC1	2	M5	7 x 20	1600	MT10CA106	1.8	4	0.7	40	1)	50	300
	CC1	2	M4	7 x 20	800	MT10CA106	1.8	5	0.8	40		30	180
	CD	2	M6	9 x 27	3200	MT10CB106	2.3	6.3	1	40	1)	50	300
	CE	1	M6	11.3x31	3200	MT10CC106	3.6	8	1.3	40	1)	50	300
2500	CC1	2	M4	7 x 20	800	MT10CA106	1.8	4	0.7	40		30	180
	CD	2	M6	9 x 27	3200	MT10CB106	2.3	4	0.7	40	1)	50	300
	CE	1	M5	11.3x31	1600	MT10CC106	3.6	8	1.3	40	1)	50	300

This document and the information contained herein, is the exclusive property of SWF Krantechnik GmbH and represents a non-public, confidential and proprietary trade secret that may not be reproduced, disclosed to third parties, altered or otherwise employed in any manner whatsoever without the express written consent of SWF Krantechnik GmbH. Copyright © (2013) SWF Krantechnik GmbH. All rights reserved.

Load [kg]	Frame size	Falls	Duty group ISO	Chain size	Gear life [h]	Motor type	Motor power HS [kW]	Hoisting speed [m/min.] HS/LS		Max. amb. temp [°C][1]		ED%[2], [3]	Starts/hour
3200	CD	2	M5	9 x 27	1600	MT10CB106	2.3	4	0.7	40	[1]	50	300
3200	CE	2	M6	11.3x31	3200	MT10CC106	3.6	6.3	1	40	[1]	50	300
4000	CE	2	M6	11.3x31	3200	MT10CC106	3.6	4	0.7	40	[1]	50	300
5000	CE	2	M5	11.3x31	1600	MT10CC106	3.6	4	0.7	40	[1]	50	300

*NOTE:

1) If 40 % ED and 240 starts per hour, then maximum temperature +50 °C.
2) Change of ED % from 50 to 40 results in a change of duty group from M6 to M5. For configurations with the duty classification M5 or M4, the duty group will remain unchanged if the ED % changes from 50 to 40.
3) ⅓ of the cycle is with low speed and ⅔ with high speed.
4) Motor, lifting gear and hooks M6 / chain M5.

2.2.2 Technical regulations

Certifications, standards and other technical documents

The product fulfills the requirements of the following standards: Machine directive EC; CSA; ASME HST-1; ASME B30.16, and EN14492/2.

This product

- is in conformity with the relevant provisions of the Machinery Directive 2006/42/EC and EMC Directive 2004/108/EC
- is applicable with the requirements of the

  CSA Standard C22.2 No. 33 – Construction and Test of Electric Cranes and Hoists*

  UL 508 – Industrial Control Equipment

  UL1004-1 – Rotating Electrical Machines – General Requirements
- has ASME duty rating up to H4 (ISO M4 – M6), depending on hoist type and hoisting speed.*
  For information about ASME Hoist Duty Service Classification, reference ASME publication catalog ASME HST-1M and ASME B30.16 (latest edition) for electric chain hoists.
- is external sound level tested
- is RoHS compliant.

*NOTE: For the 60 Hz motors.

2.2.3 Sound intensity level

- For the CA1–CC1 hoists, the maximum noise level (of the hoist) is measured at 70 dB.

This document and the information contained herein, is the exclusive property of SWF Krantechnik GmbH and represents a non-public, confidential and proprietary trade secret that may not be reproduced, disclosed to third parties, altered or otherwise employed in any manner whatsoever without the express written consent of SWF Krantechnik GmbH. Copyright © (2013) SWF Krantechnik GmbH. All rights reserved.

2.2.4 Hoist weight

Frame size	Falls	Hoist weight [kg][1)]	
		Without chain[2)]	Chain [kg/m]
CA1	**1/1**	26	0.37
CA1	**2/1**	21	0.37
CB1	**1/1**	38	0.59
CB1	**2/1**	30	0.59
CC1	**1/1**	56	1.1
CC1	**2/1**	48	2.2
CD	**1/1**	91	1.8
CD	**2/1**	94	3.5
CE	**1/1**	110	2.8
CE	**2/1**	114	5.6

[1)]Values are for the standard version hoist, optional features (e.g. GLS, inverter, double brake) are not included here.

[2)]For the frame sizes CA1–CC1, the 1-fall hoist weight includes the counterweight.

- Counterweight is needed CA1-CC1 in 1 fall

This document and the information contained herein, is the exclusive property of SWF Krantechnik GmbH and represents a non-public, confidential and proprietary trade secret that may not be reproduced, disclosed to third parties, altered or otherwise employed in any manner whatsoever without the express written consent of SWF Krantechnik GmbH. Copyright © (2013) SWF Krantechnik GmbH. All rights reserved.

3 PRODUCT CODE EXAMPLE SWF

C	B1	G	08	1	050	M5	2SP	0080	N	R	120	405	A	E	20	N
	(GE09)	(RR11)	(SPD03)	(DES27)	(LOA01)	(DIM01)	(HS01)	(DIM02)	(DES01)	(DES54)						
1	2,3	4	5,6	7	8...10	11,12	13…15	16…19	20	21	22...24	25...27	28	29	30,31	32

Pos.	Code	Feature code	Feature	Available properties							
1	C		Hoist type	C	SWF						
2,3	B1	(GE09)	Frame size	Frame size A1 B1 C1	GE09 value 02 05 10	Frame size D E	GE09 value 16 25				
4	G	(RR11)	Load chain type	G: S:	Galvanized chain Stainless steel chain						
5,6	08	(SPD03)	Hoisting speed [high]	50 Hz [m/min] 4 5 6.3 8 10 12.5 16 20	60 Hz [ft/min] 16 19 25 32 40 49 62 79	60 Hz [m/min] 4.8 6 7.6 9.6 12 15 19.2 24					
7	1	(DES27)	Chain falls	1 One fall	2 Two falls	3 Three falls	4 Four falls				
8…10	050	(LOA01)	Load [kg] (ston)	[kg] 006 63 012 125 016 160 025 250 032 320	[kg] 050 500 063 63 080 800 100 1000 125 1250	[kg] 160 1600 200 2000 250 2500 320 3200 400 4000	[kg] 500 5000 630 6300 750 7500 10T 1000				
11,12	M5	(DIM01)	ISO duty cycle	ISO: M4, M5, M6							
13…15	2SP	(HS01)	Type of hoist control	1SP One speed 2SP Two speed	INV Inverter control						
16...19	0080	(DIM02)	Height of lift [m]	0080 8							
20	N	(DES01)	Trolley type	F: Fixed Hoist Y: Push Trolley Q: Geared Trolley	N: Normal headroom trolley (Motor) S: Swivelling Trolley L: Low headroom trolley						
21	R	(DES54)	Hoist suspension type	H: Hook E: Eye R: Rigid							
22...24	120		Beam width [mm]	Min Beam width							
25...27	405		Power supply	[50 Hz] 205 208V 235 230V 405 400V 575 575V	[60 Hz] 206 208V 236 230V 466 460V 576 575V						
28	A		Control voltage [VAC]	A: 48 B: 115	C: 230 D: 24						
29	E		Electrics code	C CSA E IEC							
30,31	20	(SPD06)	Travelling speed (high)	20 m/min 24 m/min	65 FPM 80 FPM						
32	N		Special Properties	N Standard F Options S Special (LLS)							

This document and the information contained herein, is the exclusive property of SWF Krantechnik GmbH and represents a non-public, confidential and proprietary trade secret that may not be reproduced, disclosed to third parties, altered or otherwise employed in any manner whatsoever without the express written consent of SWF Krantechnik GmbH. Copyright © (2013) SWF Krantechnik GmbH. All rights reserved.

4 PRODUCT DESCRIPTION

4.1 Functional description of electrical chain hoist

The CHAINster is an integrated electric chain hoist that is designed to be used for industrial applications. It is powered with an asynchronous squirrel cage motor that is controlled through contactors. The hoist can be delivered as a hook or eye suspended unit, or together with a variety of trolleys.

KINEMATIC CHAIN FOR ELECTRICAL CHAIN HOIST

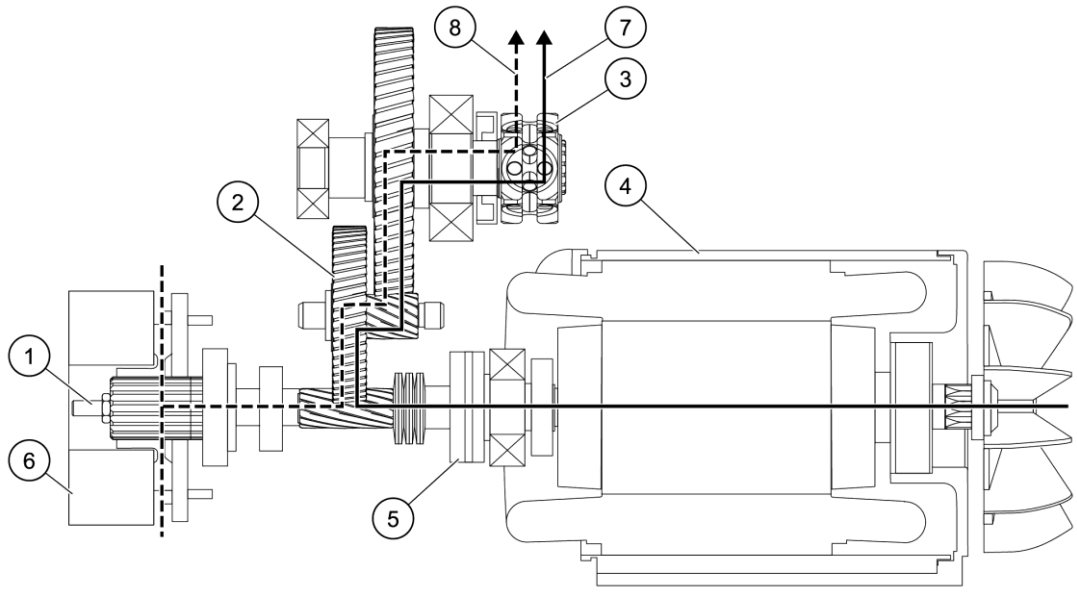

Pos.	Part
1	Adjustment screw
2	Gear
3	Chain sprocket
4	Motor
5	Friction torque limiter
6	Brake
7	Motor torque
8	Brake torque

This document and the information contained herein, is the exclusive property of SWF Krantechnik GmbH and represents a non-public, confidential and proprietary trade secret that may not be reproduced, disclosed to third parties, altered or otherwise employed in any manner whatsoever without the express written consent of SWF Krantechnik GmbH. Copyright © (2013) SWF Krantechnik GmbH. All rights reserved.

4.2 Identifying key parts of the hoist

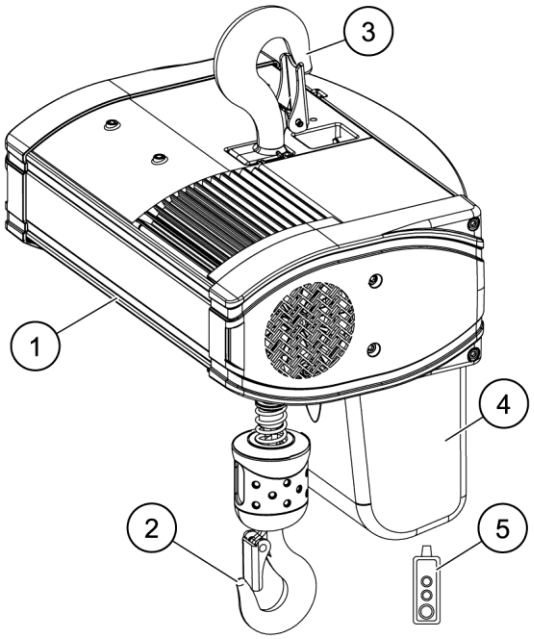

Figure 1. CB1–CC1 frame size hoist

Pos.	Part	Description
1	Hoisting machinery	Equipment that is composed of hoist frame, hoisting motor, gear, and
2	Hook	Composed of hook and hook block
3	Suspension hook	The upper hook with which hook-suspended hoist is fixed to its support
4	Chain bucket	Bucket where the lifting chain is gathered and stored
5	Controller	Pendant or radio device for operating the hoist

This document and the information contained herein, is the exclusive property of SWF Krantechnik GmbH and represents a non-public, confidential and proprietary trade secret that may not be reproduced, disclosed to third parties, altered or otherwise employed in any manner whatsoever without the express written consent of SWF Krantechnik GmbH. Copyright © (2013) SWF Krantechnik GmbH. All rights reserved.

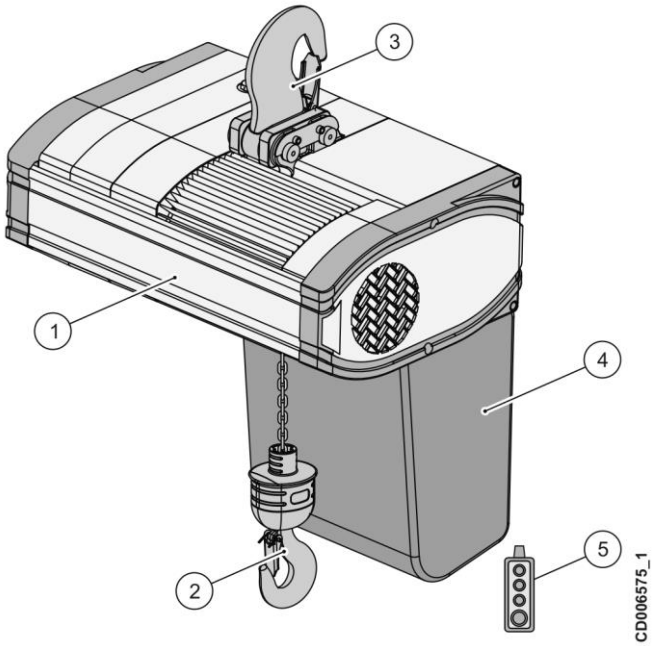

Figure 2. CD/CE frame size hoist

Pos.	Part	Description
1	Hoisting machinery	Equipment that is composed of hoist frame, hoisting motor, gear, and
2	Hook	Composed of hook and hook block
3	Suspension hook	The upper hook with which hook-suspended hoist is fixed to its support
4	Chain bucket	Bucket where the lifting chain is gathered and stored
5	Controller	Pendant or radio device for operating the hoist

This document and the information contained herein, is the exclusive property of SWF Krantechnik GmbH and represents a non-public, confidential and proprietary trade secret that may not be reproduced, disclosed to third parties, altered or otherwise employed in any manner whatsoever without the express written consent of SWF Krantechnik GmbH. Copyright © (2013) SWF Krantechnik GmbH. All rights reserved.

4.3 Features

4.3.1 Standard features

MECHANICS

No	Option
1	Mechanical overload device (friction torque limiter)
2	Disc brake that is located after the motor and the friction torque limiter, on a separate load path. It is directly linked to the load and holds the load even in case of motor or torque limiter failure.
3	2-step (frame sizes CA1 to CB1) or 3-step (frame sizes CB1 to CE) helical gear
4	Sprocket on output shaft in cantilever position
5	Operation temperature -20 °C to +50 °C (+40 °C) with rated load and speed
6	Hoist body has epoxy powder 70µm thickness paint, C2-M according to EN12944-2 and EN12944-5
7	Upper and lower hook according to DIN classification
8	Zinc plated and quenched tempered chain (class T)
9	Selection of trolleys: motor trolley, swiveling trolley, push trolley, push trolley inside hollow profile, normal headroom trolley, low headroom trolley, geared trolley With: • Rubber buffers on trolleys • Integrated wheel catch and trolley retaining device

ELECTRICS

No	Option
1	Dual speed motors with 4:1 ratio for frame size CA1, 6:1 for frame sizes CB1 to CE
2	Motor thermal protection with bi-metal switch
3	Motors that are classified as ‘TEFC’ motors with insulation class H
4	All components connected by plugs
5	Low voltage control
6	Emergency stop with main contactor
7	Separate brake rectifier that is connected to contactor (frame sizes CA1 to CC1), rectifier included in the low control voltage board (frame sizes CD/CE)
8	Inverter traveling with electronic potentiometer (EP) or multi-step mode (MS) – trolley movement with inverter or contactors
9	Mechanical upper and lower limit switches
10	IP55 protection

This document and the information contained herein, is the exclusive property of SWF Krantechnik GmbH and represents a non-public, confidential and proprietary trade secret that may not be reproduced, disclosed to third parties, altered or otherwise employed in any manner whatsoever without the express written consent of SWF Krantechnik GmbH. Copyright © (2013) SWF Krantechnik GmbH. All rights reserved.

4.3.2 Optional features

MECHANICS

No	Option	Description
1	Secondary brake	The hoist has two brakes. The one closer to the hoist body acts as the operational brake, if the main brake fails.
2	2- or 4-step rotating geared limit switch	The limit switch is available for solutions that need 2 or 4 adjustable stops.
3	Self-locking hook	A hook which cannot be opened, if the hook is with load.
4	Stainless steel hook block	The hook block is material is AISI316.
5	Stainless steel chain	The stainless steel chain is used optionall instead of the standard galvanized chain.
6	Manual brake release	The load can be lowered to the ground by using the lever designed for loosening the brake manually.
7	Hand control on hook	In the hand control on hook solution, the controls for lowering and lifting the load are implemented into the load hook.
8	IP66	The IP66 is a higher protection class that is available as an option.
9	Eye suspension	The standard hook suspension can be replaced alternatively by the eye suspension type.
10	Rain cover	The rain cover for hoist helps to avoid direct contact of the hoist with rain.

ELECTRICS

No	Option	Description
1	4-button pendant	A pendant for applications that need 2 motions
2	6-button pendant	A pendant for applications that need 3 motions
3	Key switch on pendant	A 2-button pendant that is equipped with a key switch on the emergency stop button
4	Magnet	The pendant can be equipped with a magnet that is located on the back of the pendant
5	Optional pendant	The pendant can be replaced with and old version of the pendant (Schneider type)
6	ACF-card	The ACF card uses the main voltage to control the brake, and it has a low voltage control. The hoist does not have any limit switches. If the switches are needed, they need to be adapted to the available controls on site.
7	External plug / Flat cable gland	A special plug for power feeding
8	Time meter / hour counter	A device which counts the lifting time
9	Hard wired controls	The connections of the electrical parts are created by using wires instead of a printed circuit board
10	Radio control	The controlling of the hoist(s) is done by using a remote control device
11	Non-supply of pendant	The hoist is delivered without a pendant and a pendant cable

MAINTENANCE

No	Option	Description
1	Food industry oil	The used oil is NSF-H1 listed

This document and the information contained herein, is the exclusive property of SWF Krantechnik GmbH and represents a non-public, confidential and proprietary trade secret that may not be reproduced, disclosed to third parties, altered or otherwise employed in any manner whatsoever without the express written consent of SWF Krantechnik GmbH. Copyright © (2013) SWF Krantechnik GmbH. All rights reserved.

TROLLEY

No	Option	Description
1	Traveling limit switch	The trolley stops or slows down when the traveling limit switch is activated
2	Low headroom trolley	A special trolley design to minimize the C-dimension
3	Swivelling trolley	A special trolley design for curved tracks (minimum radius is 800 mm)
4	Towing arm	A bracket for connection of the power supply to the trolley
5	Dual travel speed	A trolley that has a 5 m/min. low and a 20 m/min. high travel speed
6	Slow variable speed	The TMU1 trolley can be upgraded to a TMU2 trolley, to achieve a traveling speed that is lower than 10 m/min.
7	Worm gearbox	A special traveling motion unit where the gearbox has a 90 degree angle. This allows to attach a travellng motor parallel to the trolley side plates, to achieve reduced side dimensions of the trolley
8	Rain cover	A rain cover for the trolley helps to avoid direct contact of the hoist with rain
9	Chain driven trolley	A trolley without a TMU and travellng movement. Trolley travel is managed by pulling the hand chain.

This document and the information contained herein, is the exclusive property of SWF Krantechnik GmbH and represents a non-public, confidential and proprietary trade secret that may not be reproduced, disclosed to third parties, altered or otherwise employed in any manner whatsoever without the express written consent of SWF Krantechnik GmbH. Copyright © (2013) SWF Krantechnik GmbH. All rights reserved.

5 MAIN COMPONENTS

5.1 Hoisting motor

The hoisting motor is specially designed for hoisting purposes with good efficiency. The motor is classified as a 'TEFC motor' – totally enclosed fan-cooled motor. This includes an aluminum frame with cooling ribs for efficient cooling, and a cooling fan for the motor.

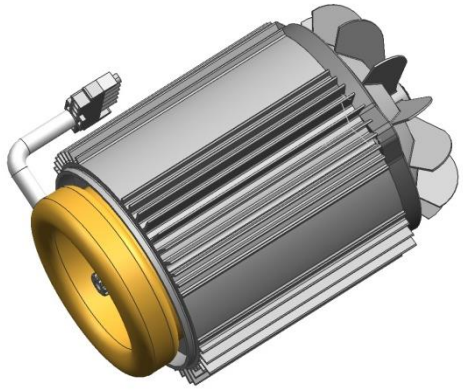

Motor type	Speed ratio	Power [kW]		Speed [n/rpm]		Cos φ		Nominal voltage[1] 230 V – Amps						Nominal voltage[1] 400 V – Amps					
								Io		In		Ist		Io		In		Ist	
		HS	LS	HS	LS	HS	LS	HS	LS	HS	LS	HS	LS	HS	LS	HS	LS	HS	LS
MT07CA104	**1/4**	0.45	0.11	2630	495	0.73	0.62	4.0	1.9	4.0	1.9	8.7	2.4	2.3	1.1	2.3	1.1	5	1.4
MT08CA106	**1/6**	0.9	0.15	2850	430	0.75	0.68	5.2	3.3	5.2	3.3	17	4.0	3	1.9	3	1.9	10	2.3
MT08CA206	**2/6**	0.45	0.15	1420	430	0.68	0.68	4.0	3.3	4.0	3.3	9.0	4.0	2.5	1.9	2.5	1.9	5.0	2.3
MT10CA106	**1/6**	1.8	0.3	2750	400	0.83	0.65	6.3	4.9	8.3	4.9	30	7.1	3.6	2.8	4.8	2.8	17	4.1
MT10CA206	**2/6**	0.9	0.25	1390	420	0.74	0.67	3.3	4.9	4.7	4.9	18	6.1	1.9	2.8	2.7	2.8	11	3.6
MT10CB106	**1/6**	2.3	0.38	2800	420	0.85	0.53	6.6	4.5	9.9	4.7	47	7.8	3.8	2.6	5.7	2.7	27	4.5
MT10CC106	**1/6**	3.6	0.6	2800	400	0.87	0.63	7.8	7.5	14	7.5	68	11.7	4.5	4.3	8.2	4.3	39	6.7

[1]NOTE: The voltage values are considered as +/-5% of the nominal voltage range.

[2]NOTE: The size of the main fuse for the hoist power supply is 10A (up to frame size CC1) / 20A (frame sizes CD/CE). Please consult SWF if more specified information is needed.

Abbreviations	
Io	Current without load
In	Nominal current
Ist	Starting current

This document and the information contained herein, is the exclusive property of SWF Krantechnik GmbH and represents a non-public, confidential and proprietary trade secret that may not be reproduced, disclosed to third parties, altered or otherwise employed in any manner whatsoever without the express written consent of SWF Krantechnik GmbH. Copyright © (2013) SWF Krantechnik GmbH. All rights reserved.

5.1 Hoisting gear

The hoisting gear of the chain hoist is specially developed for hoisting appliances and has two or three helical steps. The gear is lubricated with oil so that the lubrication lasts for the designed working period of the hoist.

2-step gears	3-step gears
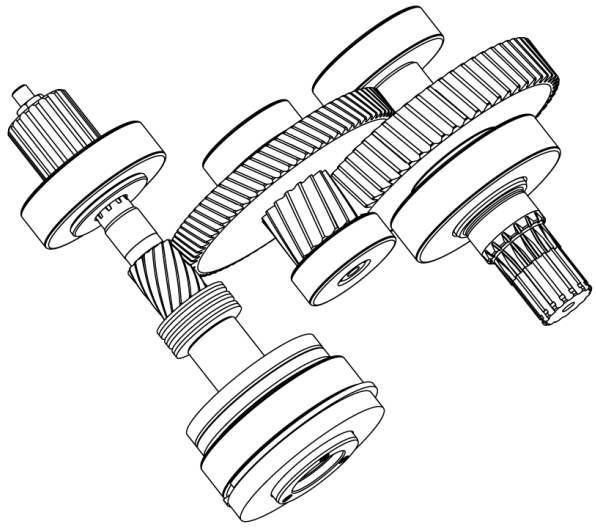	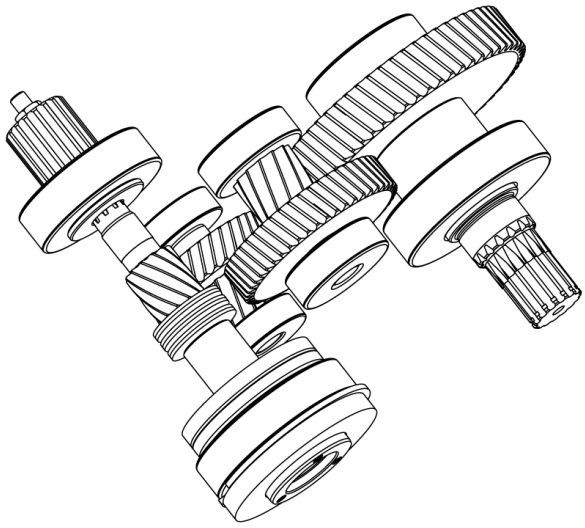

Figure 1. Hoisting gear constructions for the size CB1 hoist type.

Frame size	Main hoisting speed [1 fall (m/min.)]	Gear type	Gear ratio
CA1	4	2-step	39.382
	8	2-step	39.382
	10	2-step	31.955
	16	2-step	19.576
	20	2-step	16.039
CB1	4	3-step	49.894
	8	3-step	49.894
	10	3-step	39.852
	16	2-step	25.286
	20	2-step	20.196
CC1	4	3-step	71.777
	8	3-step	71.777
	10	3-step	57.172
	16	3-step	35.832
	20	3-step	28.541
CD	8	3-step	98.154
	12.5	3-step	64.501
	16	3-step	49.077
CE	8	3-step	110.783
	12.5	3-step	69.586
	16	3-step	56.877
	20	3-step	46.275

This document and the information contained herein, is the exclusive property of SWF Krantechnik GmbH and represents a non-public, confidential and proprietary trade secret that may not be reproduced, disclosed to third parties, altered or otherwise employed in any manner whatsoever without the express written consent of SWF Krantechnik GmbH. Copyright © (2013) SWF Krantechnik GmbH. All rights reserved.

5.2 Electrics

5.2.1 Cable inputs

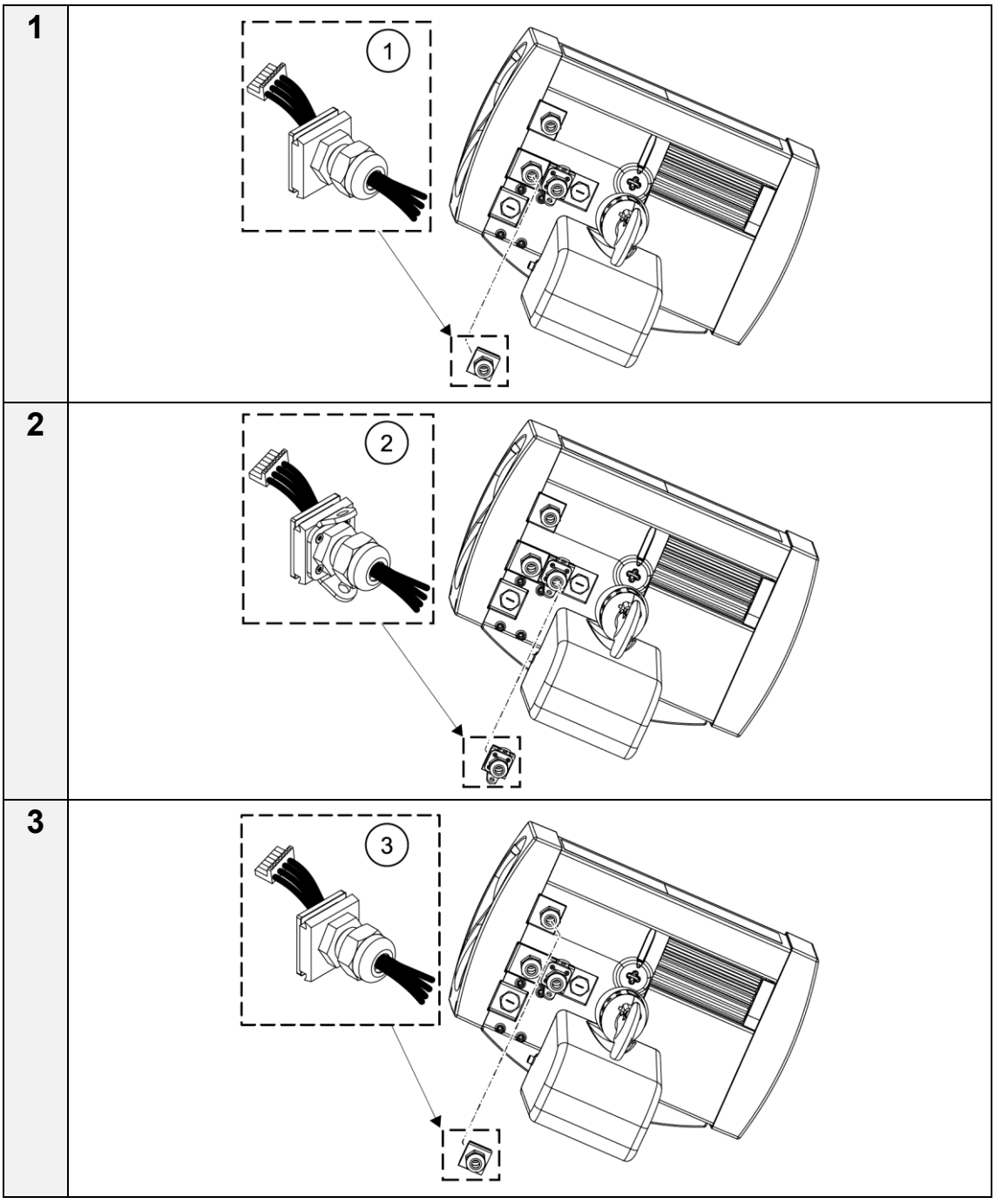

Figure 2. Cable inputs for the frame sizes CA1–CC1

Pos.	Part	Size (class)
1	Power supply	M20
2	Pendant controller	M20
3	TMU (TMK traveling frequency converter)	M20

This document and the information contained herein, is the exclusive property of SWF Krantechnik GmbH and represents a non-public, confidential and proprietary trade secret that may not be reproduced, disclosed to third parties, altered or otherwise employed in any manner whatsoever without the express written consent of SWF Krantechnik GmbH. Copyright © (2013) SWF Krantechnik GmbH. All rights reserved.

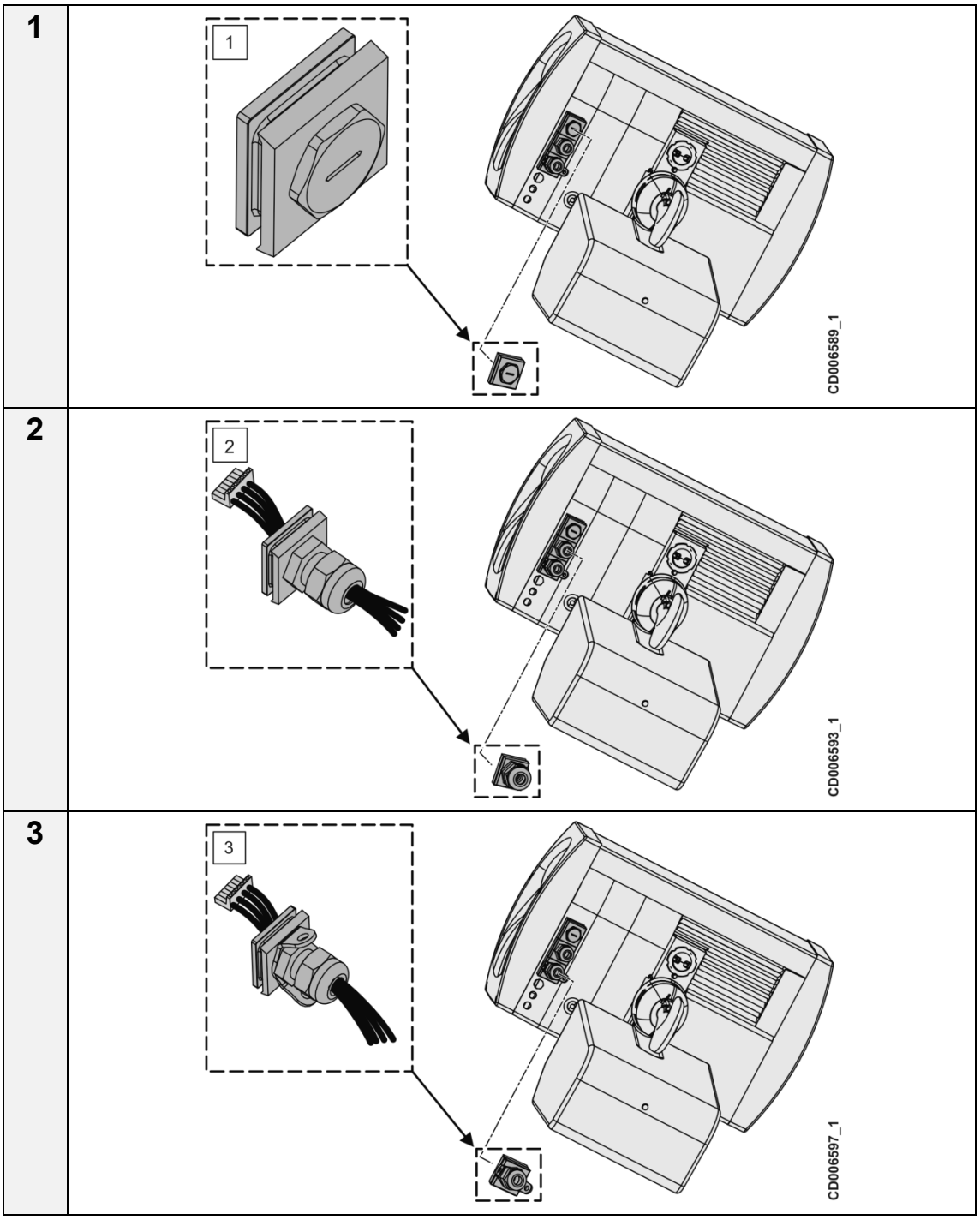

Figure 3. Cable inputs for the frame sizes CD/CE

Pos.	Part	Size (class)
1	Free cable gland	M20
2	Power supply and trolley connection cable	M20
3	Control cable	M20
For the frame sizes CD/CE additionally: 1 x M16; 1 x M20; 1 x M25		

This document and the information contained herein, is the exclusive property of SWF Krantechnik GmbH and represents a non-public, confidential and proprietary trade secret that may not be reproduced, disclosed to third parties, altered or otherwise employed in any manner whatsoever without the express written consent of SWF Krantechnik GmbH. Copyright © (2013) SWF Krantechnik GmbH. All rights reserved.

5.2.2 Wiring principle

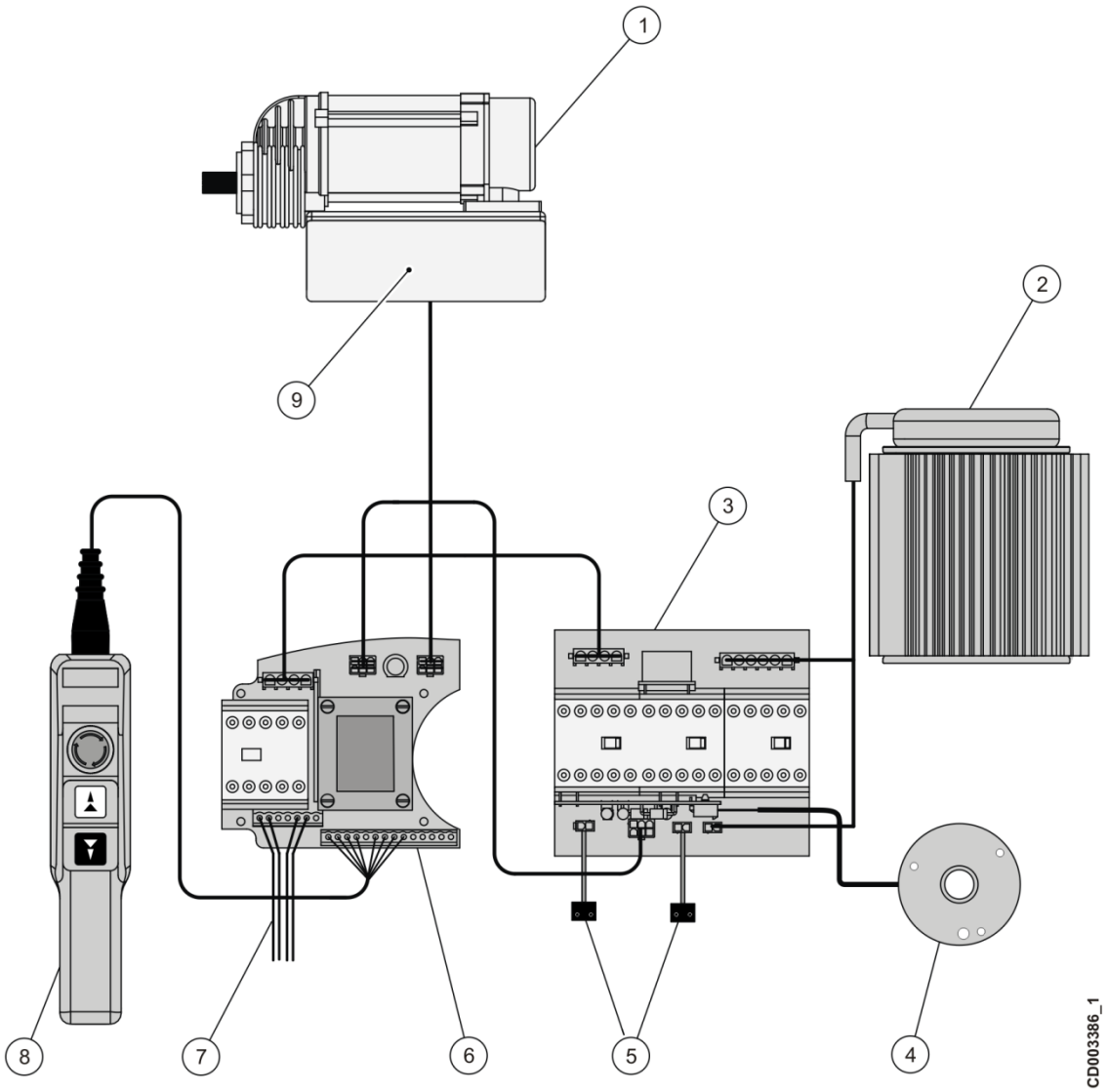

Figure 4. Wiring principle for the frame sizes CA1–CC1

Pos.	Part
1	Traveling motor unit with integrated inverter
2	Hoisting motor + bimetal switches
3	Motor control board
4	Brake
5	Lifting limit switches
6	Power board (main contactor and transformer)
7	Power supply
8	Pendant
9	Trolley inverter located inside the electric cubicle

This document and the information contained herein, is the exclusive property of SWF Krantechnik GmbH and represents a non-public, confidential and proprietary trade secret that may not be reproduced, disclosed to third parties, altered or otherwise employed in any manner whatsoever without the express written consent of SWF Krantechnik GmbH. Copyright © (2013) SWF Krantechnik GmbH. All rights reserved.

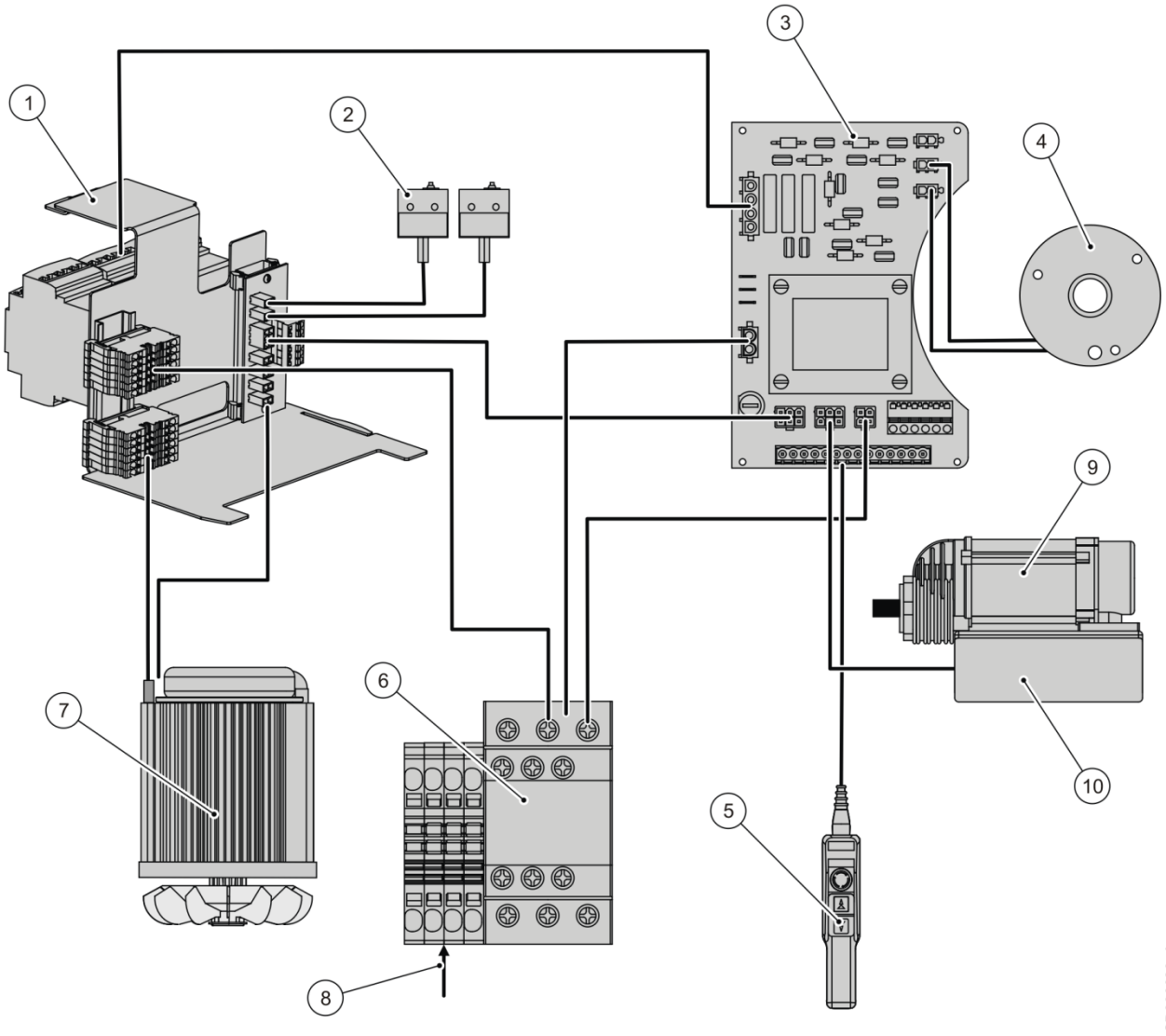

Figure 5. Wiring principle for the frame sizes CD/CE

Pos.	Part
1	Motor board
2	Hoisting limit switches
3	Power board
4	Brake
5	Pendant
6	Main contactor
7	Hoisting motor
8	Power supply
9	Traveling motor unit with integrated inverter
10	Trolley inverter located inside the electric cubicle

This document and the information contained herein, is the exclusive property of SWF Krantechnik GmbH and represents a non-public, confidential and proprietary trade secret that may not be reproduced, disclosed to third parties, altered or otherwise employed in any manner whatsoever without the express written consent of SWF Krantechnik GmbH. Copyright © (2013) SWF Krantechnik GmbH. All rights reserved.

5.3 Hoisting brakes

5.3.1 Single brake

The chain hoist is equipped with a disc brake which includes a rotating disc with two friction linings. The brake coil is energized by a DC voltage coming from the brake rectifier. The brake rectifier converts the AC voltage into a DC voltage. To ensure the self-cleaning function, the rotating parts of the brake are not enclosed.

The brake is designed so that it lasts for the designed working period of the hoist. The brake wear can be checked at the brake coil, through an inspection hole. The brake lining wear criteria is indicated on a sticker that is placed next to the measurement hole. If the brake wear exceeds the allowed measurement criteria, contact authorized service personnel for a brake change.

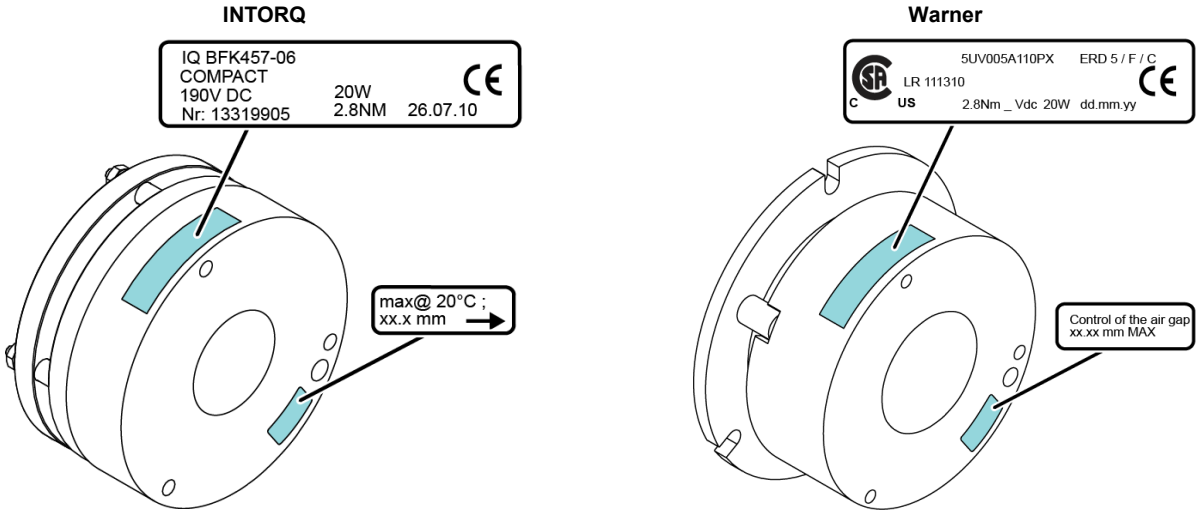

Figure 6. Single brake assembly – INTORQ and Warner brakes

BRAKE CHARACTERISTICS

Frame size	Brake torque [Nm/lbf]		Brake measurement [20 °C] [mm]*	
	[Nm]	[lbf]	Brake type	
			INTORQ	Warner
CA1	2.8	2.1	25.3	20.7
CB1	6.8	5.0	25.3	-
CC1	14	10.3	30	-
CD	16	11.79	33.5	-
CE	21	15.48	33.5	-

*NOTE: The brake measurement value that is given in the table is only a theoretical value. The value varies according to manufacturer and brake series. For each case, the maximum value that is not to be exceeded is indicated in the brake sticker that is located on the brake.

This document and the information contained herein, is the exclusive property of SWF Krantechnik GmbH and represents a non-public, confidential and proprietary trade secret that may not be reproduced, disclosed to third parties, altered or otherwise employed in any manner whatsoever without the express written consent of SWF Krantechnik GmbH. Copyright © (2013) SWF Krantechnik GmbH. All rights reserved.

5.3.2 Double brake (option)

The double brake assembly consists of a main brake and a secondary brake that are assembled on the same hub. During the hoisting motion, the brake board energizes the main and the secondary brake simultaneously. When the hoisting motion stops, the main brake switches off immediately. The secondary brake remains energized for a few milliseconds by the motor inductive effect.

The main brake holds the first position (located 'on the top') in the double brake assembly, which makes the checking of the brake wear easier.

The secondary brake works as a back-up brake for the main brake. It becomes the functional brake only if the main brake is damaged in a way that it cannot hold the load. If the main brake operates normally, there is no need to check the wear on the secondary brake.

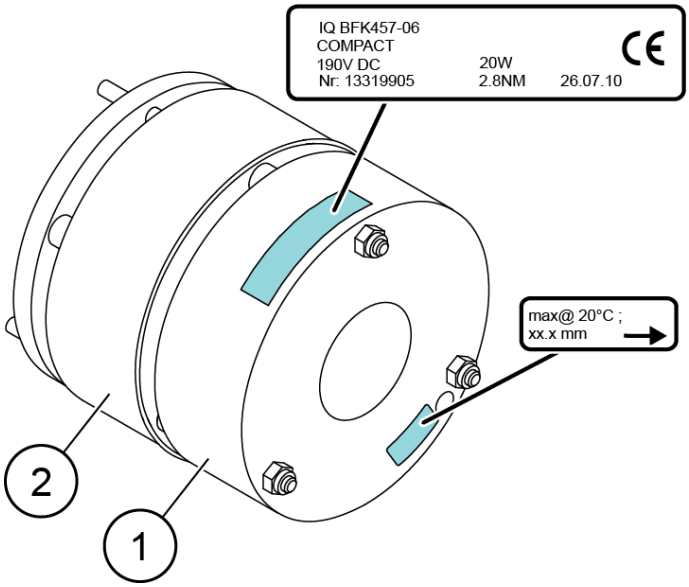

1. *Main brake*
2. *Secondary brake*

Figure 7. Double brake assembly – INTORQ brake

BRAKE CHARACTERISTICS

Frame size	Brake amount (pcs)		Brake torque [Nm/lbf]				Brake measurement [20 °C] [mm][2)]	
	Single brake	Double brake	Main brake		Secondary brake[1)]		Brake type	
			[Nm]	[lbf]	[Nm]	[lbf]	INTORQ	Warner
CA1	1	2	2.8	2.1	2.8	2.1	25.3	20.7
CB1	1	2	6.8	5.0	6.8	5.0	25.3	-
CC1	1	2	14	10.3	14	10.3	30	-
CD	1	2	16	11.79	16	11.79	33.5	-
CE	1	2	21	15.48	21	15.48	33.5	-

1) The secondary brake is only a back-up brake for the main brake. If the main brake operates normally, there is no need to check the wear on the secondary brake.

2) The brake measurement value that is given in the table is a theoretical value. The value varies according to manufacturer and brake series. For each case, the maximum value that is not to be exceeded is indicated in the brake sticker that is located on the brake.

This document and the information contained herein, is the exclusive property of SWF Krantechnik GmbH and represents a non-public, confidential and proprietary trade secret that may not be reproduced, disclosed to third parties, altered or otherwise employed in any manner whatsoever without the express written consent of SWF Krantechnik GmbH. Copyright © (2013) SWF Krantechnik GmbH. All rights reserved.

LENGTH EXTENSION

The following optional features, if fitted, extend the hoist length as indicated in the table:

- Double brake
- Geared limit switch (+ double brake)
- Stand-by heating

Frame size	Length extension [mm]
CA1	115
CB1	132
CC1	132
CD	114
CE	112

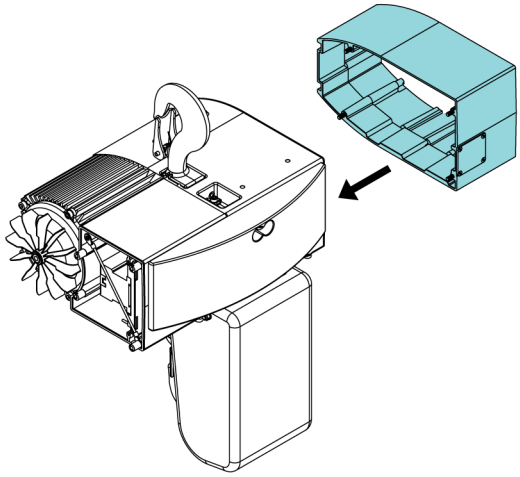

Figure 8. Hoist with extension profile part.

This document and the information contained herein, is the exclusive property of SWF Krantechnik GmbH and represents a non-public, confidential and proprietary trade secret that may not be reproduced, disclosed to third parties, altered or otherwise employed in any manner whatsoever without the express written consent of SWF Krantechnik GmbH. Copyright © (2013) SWF Krantechnik GmbH. All rights reserved.

5.3.3 Manual brake release (option)

The manual brake release feature is available as an option. This feature allows you to release the brake by hand in situations where you need to be able to lower the load manually.

The manual brake release should only be used in emergency situations where the brake cannot be released normally. Extensive use of the manual brake release as well as high lowering speed can result in immediate wear-out of the brake lining. Note the following warnings that are related to the use of the manual brake release.

The instructions for the use of the manual brake release function are given in a sticker that is attached to the hoist frame. The sticker also contains the relevant warnings to be taken into account. See the following example illustration:

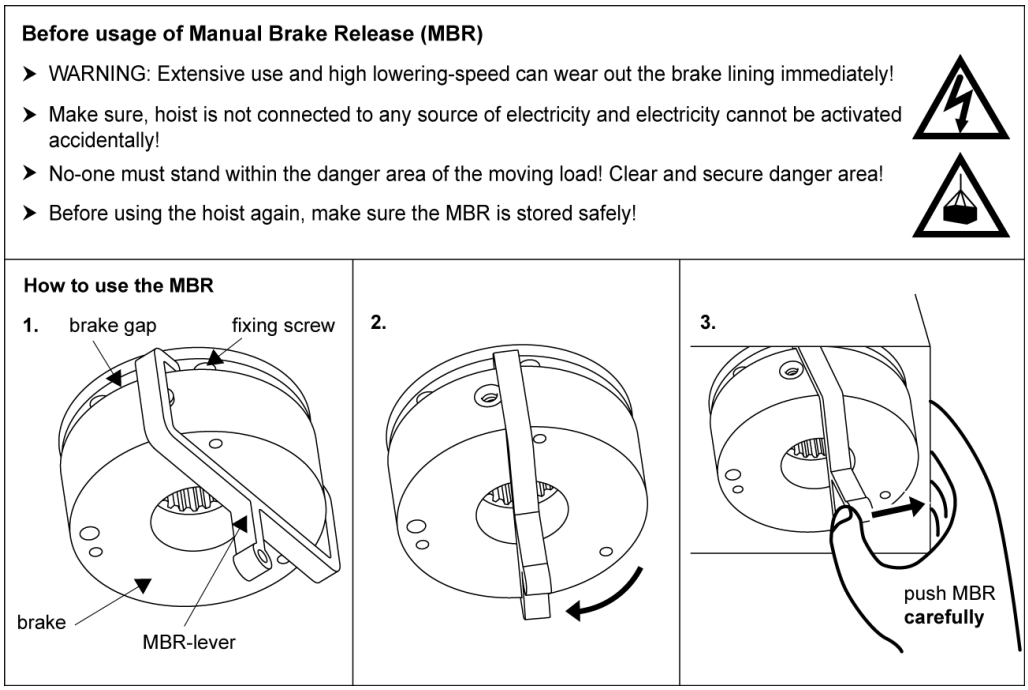

This document and the information contained herein, is the exclusive property of SWF Krantechnik GmbH and represents a non-public, confidential and proprietary trade secret that may not be reproduced, disclosed to third parties, altered or otherwise employed in any manner whatsoever without the express written consent of SWF Krantechnik GmbH. Copyright © (2013) SWF Krantechnik GmbH. All rights reserved.

5.3.4 Brake coil voltages and resistance

BRAKE COIL VOLTAGE

Motor voltage [Vac]		Frequency [Hz]	Brake voltage [Vd]
208 V	**3 phases**	60	103
208V-230V / 460 V reconnectable	**3 phases**	60	190
380V-415V	**3 phases**	50/60	190
440V-480V	**3 phases**	60	190

*NOTE: All values are also considered as +/-10% of nominal voltage.

BRAKE COIL RESISTANCE

Frame size	Brake type [single brake]		Brake torque		Rated voltage [V]	Coil resistance [20 °C]	
	INTORQ	Warner	[Nm]	[lbf]		min. [Ohm]	max. [Ohm]
CA1	**-**	**5UV005A110P2**	2.8	2.1	103	400	550
CA1	**-**	**5UV005A110P1**	2.8	2.1	190	1500	2030
CA1	**BFK457-06**		2.8	2.1	103	496.6	564.9
CA1	**BFK457-06**		2.8	2.1	190	1661	1949
CA1	**BFK457-06**		2.8	2.1	255	2439	2816
CA1	**BFK457-06**		2.8	2.1	320	4736	5548
CB1	**BFK457-06**		6.8	5.0	103	496.6	564.9
CB1	**BFK457-06**		6.8	5.0	190	1661	1949
CB1	**BFK457-06**		6.8	5.0	255	2439	2816
CB1	**BFK457-06**		6.8	5.0	320	4736	5548
CC1	**BFK457-08**		14	10.3	103	398.9	449.8
CC1	**BFK457-08**		14	10.3	190	1366	1552
CC1	**BFK457-08**		14	10.3	255	2167	2454
CC1	**BFK457-08**		14	10.3	320	3418	3921
CD	**BFK457-10**		16	11.79	103	313	350
CD	**BFK457-10**		16	11.79	190	1125	1282
CD	**BFK457-10**		16	11.79	255	2060	2285
CD	**BFK457-10**		16	11.79	320	3227	3614
CE	**BFK457-10**		21	15.48	103	313	350
CE	**BFK457-10**		21	15.48	190	1125	1282
CE	**BFK457-10**		21	15.48	255	2060	2285
CE	**BFK457-10**		21	15.48	320	3227	3614

This document and the information contained herein, is the exclusive property of SWF Krantechnik GmbH and represents a non-public, confidential and proprietary trade secret that may not be reproduced, disclosed to third parties, altered or otherwise employed in any manner whatsoever without the express written consent of SWF Krantechnik GmbH. Copyright © (2013) SWF Krantechnik GmbH. All rights reserved.

5.4 Overload device: Friction torque limiter

The overload protection of the hoisting unit is ensured through a direct acting limiting device, the friction torque limiter. The torque limiter meets the requirements of the EN14492-2 standard that are set for this type of hoisting units.

The setting of the friction torque limiter allows the hoisting unit to lift a load that corresponds to the dynamic test load of 110% (EUR) and 125% (US) of the SWL (safe working load). It prevents the hoisting unit from lifting a load of 160% of the SWL. The friction torque limiter enables the brake to hold the load without any interaction with the friction torque limiter.

The construction of the friction torque limiter assembly varies according to the hoist frame size. The hoist bodies CA1–CB1 use the same kind of friction torque limiter with just one torque limiter disc, whereas the bigger models, CC1–CE, are built with a torque limiter construction that includes two torque limiter discs. An intermediate disc is placed between the two torque limiter discs, providing the construction with altogether three friction surfaces to increase the torque.

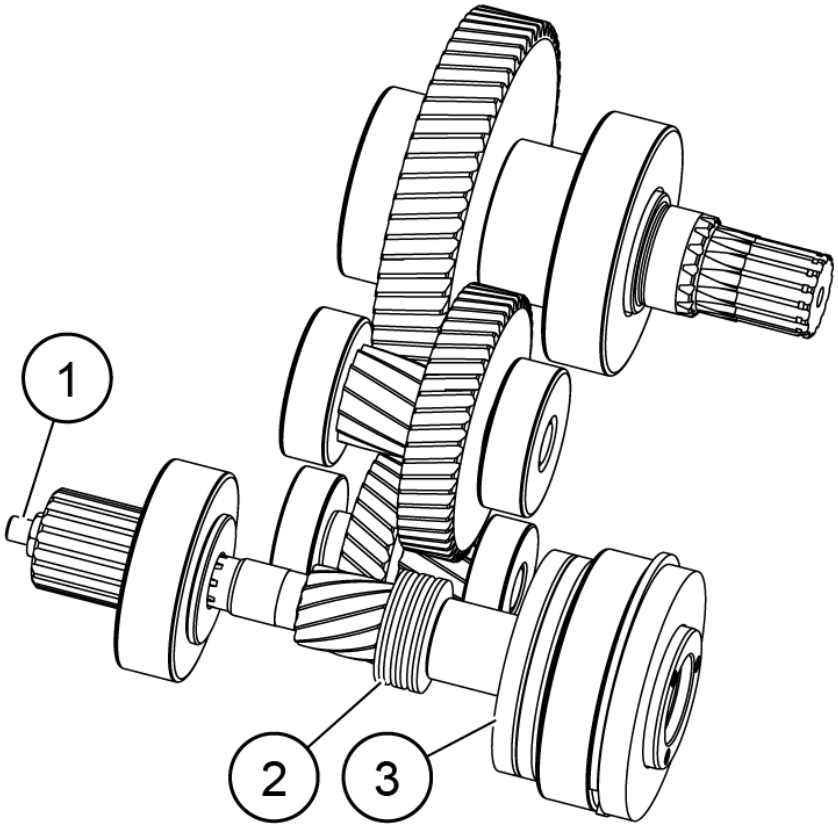

Figure 9. The following illustration presents the friction torque limiter type that is used in the hoists with frame sizes CA1 and CB1. It has only one torque limiter disc.

Pos.	Part
1	Setting screw
2	Belleville washers
3	Torque limiter disc with lining

This document and the information contained herein, is the exclusive property of SWF Krantechnik GmbH and represents a non-public, confidential and proprietary trade secret that may not be reproduced, disclosed to third parties, altered or otherwise employed in any manner whatsoever without the express written consent of SWF Krantechnik GmbH. Copyright © (2013) SWF Krantechnik GmbH. All rights reserved.

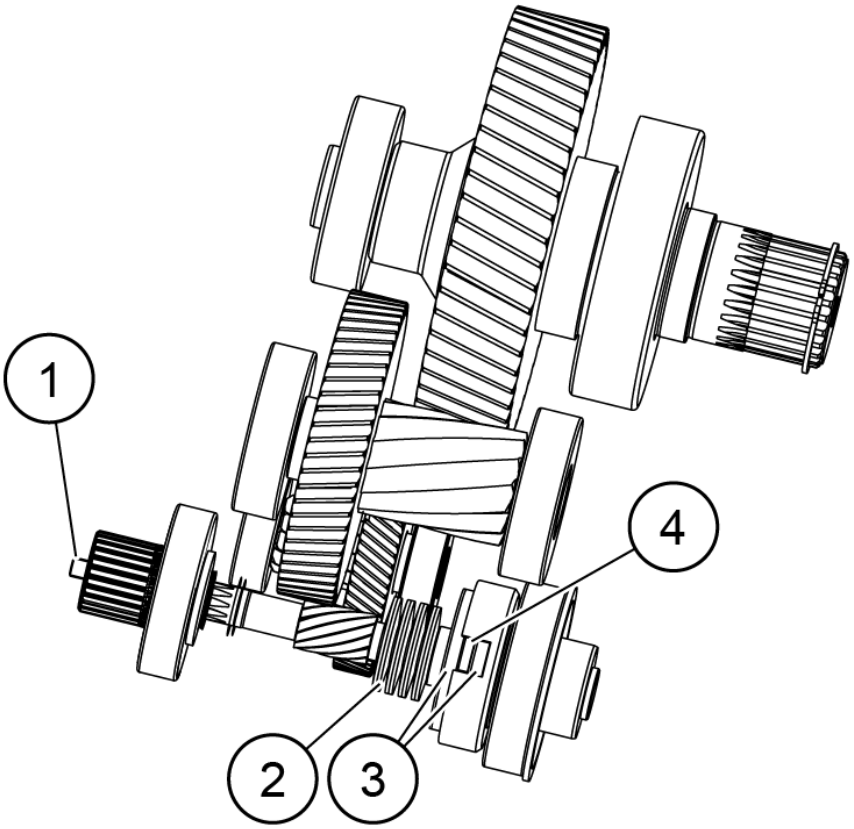

Figure 10. The friction torque limiter for the frame sizes CC1–CE. This torque limiter is built with two torque limiter discs and an intermediate disc between them, to engage altogether three friction surfaces – resulting in an increased torque.

Pos.	Part
1	Setting screw
2	Belleville washers
3	Torque limiter discs with lining
4	Intermediate torque limiter disc

This document and the information contained herein, is the exclusive property of SWF Krantechnik GmbH and represents a non-public, confidential and proprietary trade secret that may not be reproduced, disclosed to third parties, altered or otherwise employed in any manner whatsoever without the express written consent of SWF Krantechnik GmbH. Copyright © (2013) SWF Krantechnik GmbH. All rights reserved.

5.5 Limit switch: Rotating geared limit switch

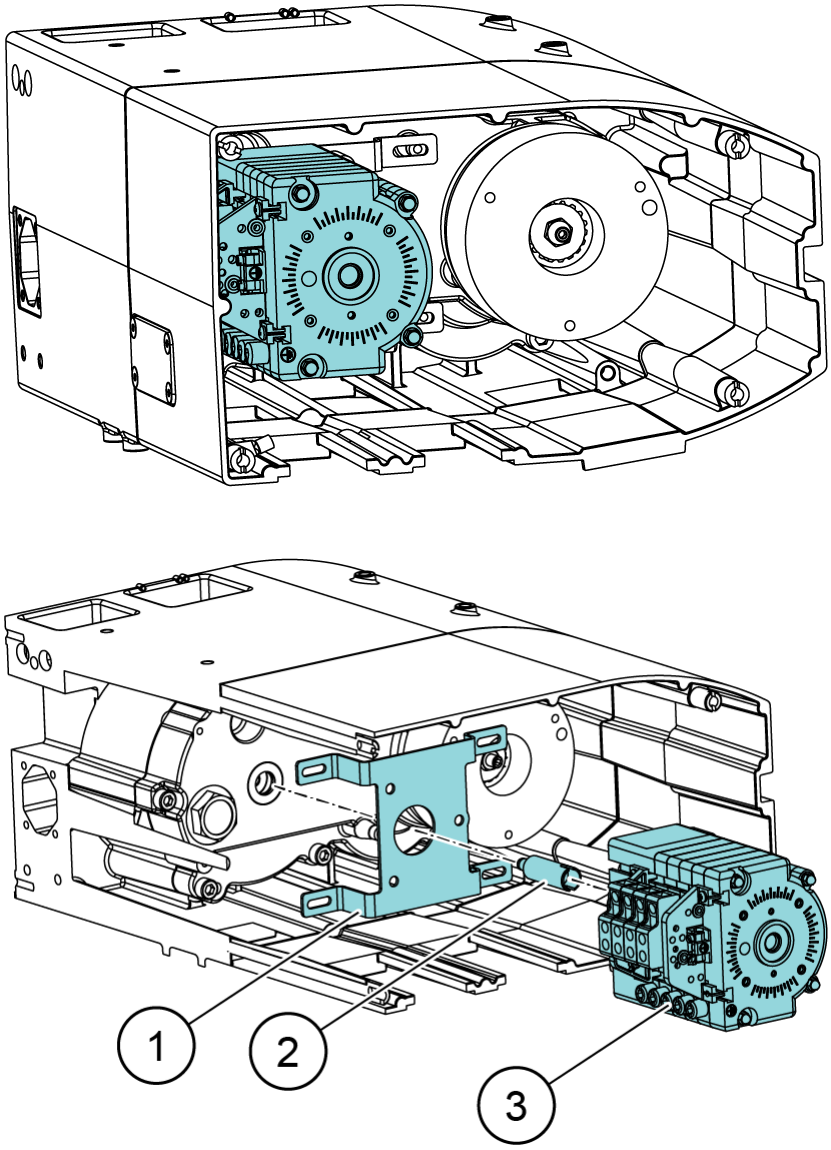

Figure 11. 4-step rotating geared limit switch for frame sizes CB1–CC1*

Pos.	Part
1	Fixing plate
2	Coupling
3	Rotating geared limit switch

*NOTE: The rotating geared limit switch is available as a 2-step or a 4-step version.

This document and the information contained herein, is the exclusive property of SWF Krantechnik GmbH and represents a non-public, confidential and proprietary trade secret that may not be reproduced, disclosed to third parties, altered or otherwise employed in any manner whatsoever without the express written consent of SWF Krantechnik GmbH. Copyright © (2013) SWF Krantechnik GmbH. All rights reserved.

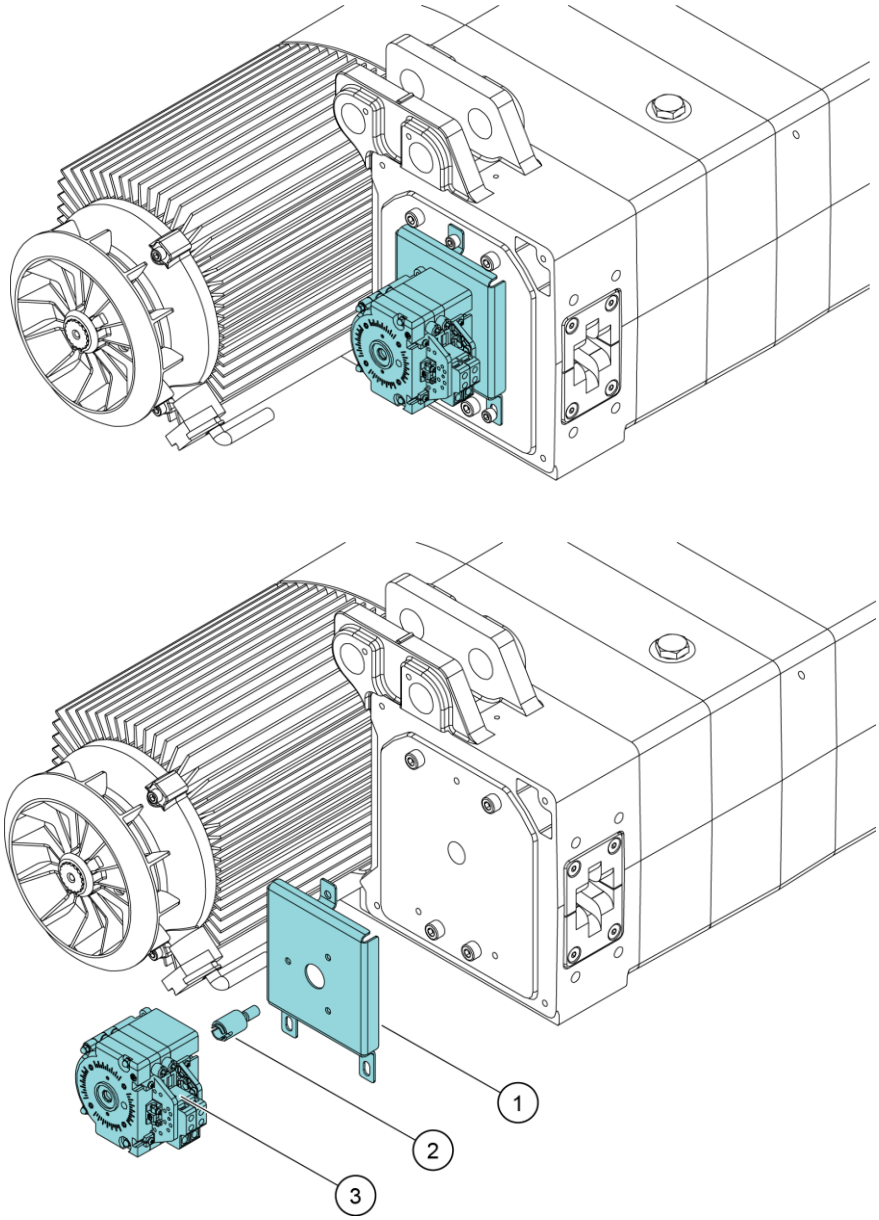

Figure 12. 2-step rotating geared limit switch for frame sizes CD/CE*

Pos.	Part
1	Fixing plate
2	Coupling
3	Rotating geared limit switch

*NOTE: The rotating geared limit switch is available as a 2-step or a 4-step version.

This document and the information contained herein, is the exclusive property of SWF Krantechnik GmbH and represents a non-public, confidential and proprietary trade secret that may not be reproduced, disclosed to third parties, altered or otherwise employed in any manner whatsoever without the express written consent of SWF Krantechnik GmbH. Copyright © (2013) SWF Krantechnik GmbH. All rights reserved.

5.5.1 Functional description of the rotating geared limit switch

2-step rotating geared limit switch

The 2-step rotating geared limit switch works together with the internal controls as an adjustable upper and lower stop limit.

4-step rotating geared limit switch

The 4-step rotating geared limit switch provides, together with the internal controls, an adjustable upper and lower stop limit. Two (2) of the cams are not connected to the controls, which means they can be used freely for the end-user requirements.

If the hoist is equipped with a geared limit switch, the cutting points (upper and lower limits) of the limit switch need to be adjusted before starting to operate the hoist. A sticker (2), that is placed next to the cover plate (1) that protects the geared limit switch cams (adjustment holes) on the hoist profile, gives more detailed information about each rotating geared limit switch version and the function of the limit switch adjustment screws.

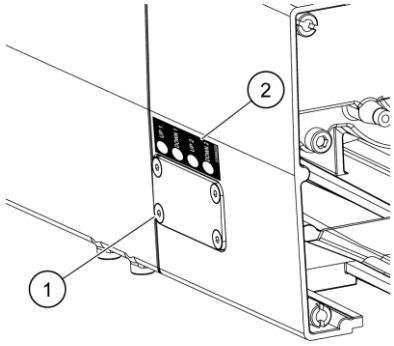

Figure 13. Rotating geared limit switch information sticker and adjustment screw (cams) cover plate on the hoist profile, located on the chain bag side of the hoist.

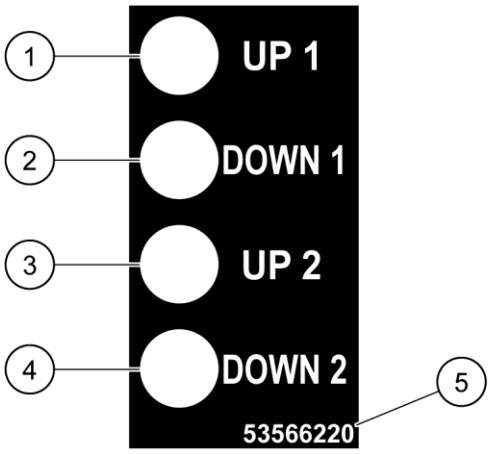

1. *Upper (UP) limit 1*
2. *Lower (DOWN) limit 1*
3. *Upper (UP) limit 2*
4. *Lower (DOWN) limit 2*
5. *Limit switch ID number*

Figure 14. Information sticker for the limit switch adjustment (example of a 4-step rotating geared limit switch).

This document and the information contained herein, is the exclusive property of SWF Krantechnik GmbH and represents a non-public, confidential and proprietary trade secret that may not be reproduced, disclosed to third parties, altered or otherwise employed in any manner whatsoever without the express written consent of SWF Krantechnik GmbH. Copyright © (2013) SWF Krantechnik GmbH. All rights reserved.

5.5.2 Rotating geared limit switch types

2-step rotating geared limit switch	4-step rotating geared limit switch
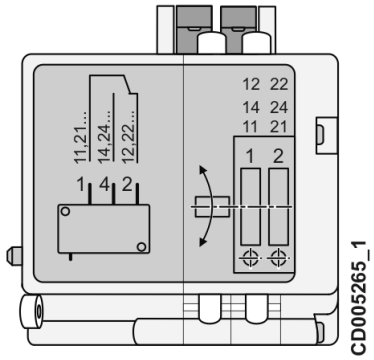	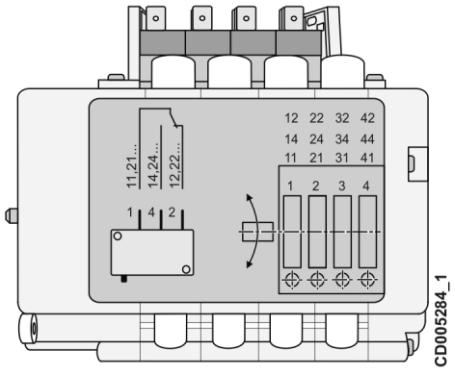

2-step geared limit switch	4-step geared limit switch
The setscrew 1 is the upper limit, and the setscrew 2 the down limit.	The setscrew 1 is the upper limit 1 (UP 1) and the setscrew 2 the down limit 1 (DOWN 1). The setscrew 3 is the upper limit 2 (UP 2) and the setscrew 4 the down limit 2 (DOWN 2).

Frame size	Type	Limit switch type	
		2-step	4-step
CA1	Stromag	151-90460-180	151-90459-180
CB1	Stromag	151-90460-180	151-90459-180
CC1	Stromag	151-90460-180	151-90459-180
CD	Stromag	151-90460-180	151-90459-180
CE	Stromag	151-90460-180	151-90459-180

5.5.3 Operational limits

The operational limits for a standard rotating limit switch are as follows:

Frame size	Max. HOL[1)] [m]	
	Ratio 180	Ratio 280
CA1	20.3	31.60
CB1	25.8	40.20
CC1	37	57.60
CD	49.7	77.40
CE	57.1	88.90

[1)]The lifting heights given are for the 1-fall hoists.

[2)]The hoist length increases in configurations with a 4-step rotating geared limit switch and with the ratio 470.

CE and CD more than 8 meter per minut lifting speed a gear limit switch is standard!

This document and the information contained herein, is the exclusive property of SWF Krantechnik GmbH and represents a non-public, confidential and proprietary trade secret that may not be reproduced, disclosed to third parties, altered or otherwise employed in any manner whatsoever without the express written consent of SWF Krantechnik GmbH. Copyright © (2013) SWF Krantechnik GmbH. All rights reserved.

5.6 Chain reeving components

The chain hoist units are fitted with a special patented chain drive. The solution includes additional supporting (intermediate) teeth on the chain sprocket which improve the support for the chain and reduce stress on the chain.

The chain sprocket has five pockets and five intermediate teeth on the sprocket. The intermediate teeth enable an accurate positioning of the chain, resulting in less chain wear and a longer lifetime of the chain.

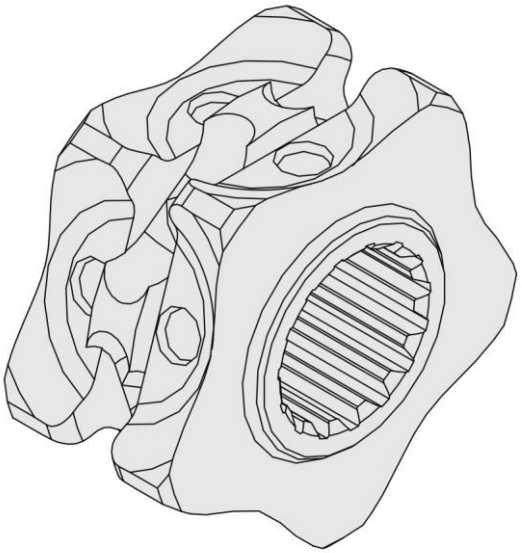

This document and the information contained herein, is the exclusive property of SWF Krantechnik GmbH and represents a non-public, confidential and proprietary trade secret that may not be reproduced, disclosed to third parties, altered or otherwise employed in any manner whatsoever without the express written consent of SWF Krantechnik GmbH. Copyright © (2013) SWF Krantechnik GmbH. All rights reserved.

5.6.1 Chain sprocket

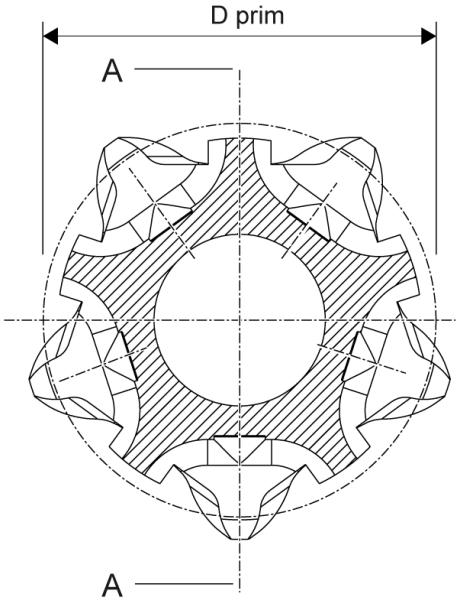

Frame size	Chain sprocket	Chain	Nbr of pockets	D prim [mm]
CA1	SINGLE	4 x 11	5	35.866
CB1	SINGLE	5 x 14	5	45.61
CC1	SINGLE	7 x 20	5	65.45
CD	SINGLE	9 x 27	5	87.869
CE	SINGLE	11.3 x 31	5	100.978

This document and the information contained herein, is the exclusive property of SWF Krantechnik GmbH and represents a non-public, confidential and proprietary trade secret that may not be reproduced, disclosed to third parties, altered or otherwise employed in any manner whatsoever without the express written consent of SWF Krantechnik GmbH. Copyright © (2013) SWF Krantechnik GmbH. All rights reserved.

5.6.2 Return sprocket

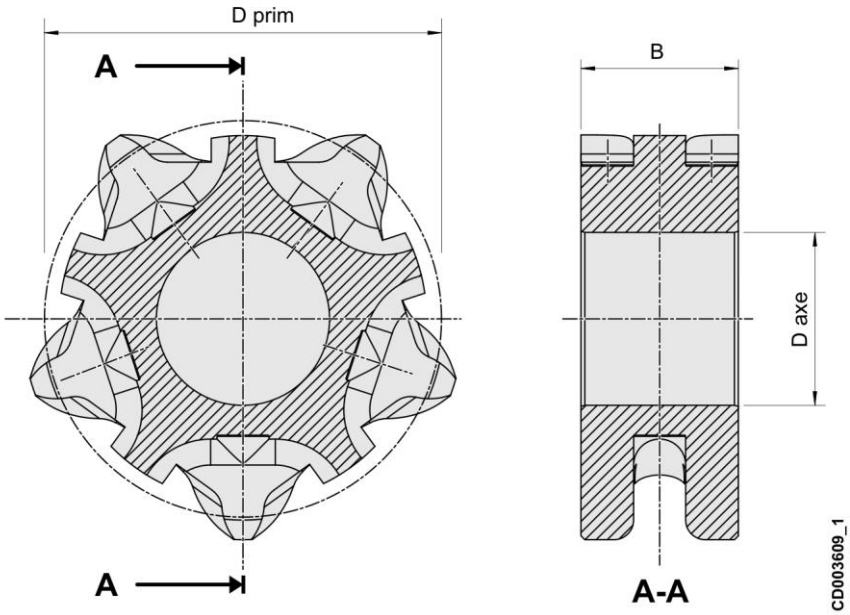

Frame size	Chain sprocket	Chain	Nbr. of pockets	D prim [mm]	D axe [mm] [Ø]	B [mm]	
CA1	SINGLE	4 x 11	5	35.866	16H7	20.0	-0.1
CB1	SINGLE	5 x 14	5	45.61	16H7	25.5	+-0.1
CC1	SINGLE	7 x 20	5	65.35	32H7	33.0	-0.1
CD	SINGLE	9 x 27	5	87.869	44F6	35.0	-0.1
CE	SINGLE	11.3 x 31	5	100.978	44F6	40.0	-0.1

*NOTE: The return sprocket is only for the 2-fall hoist versions.

This document and the information contained herein, is the exclusive property of SWF Krantechnik GmbH and represents a non-public, confidential and proprietary trade secret that may not be reproduced, disclosed to third parties, altered or otherwise employed in any manner whatsoever without the express written consent of SWF Krantechnik GmbH. Copyright © (2013) SWF Krantechnik GmbH. All rights reserved.

5.7 Hoist suspension type

5.7.1 Eye suspension

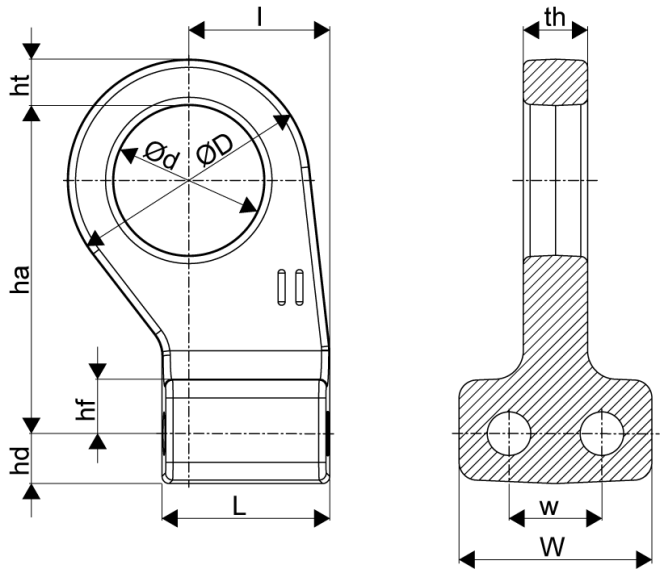

Figure 15. Eye suspension for frame sizes CA1–CC1

Frame size	Dimensions [mm]										
	L	l	D [ø]	d [ø]	hd	ha	ht	hf	W	w	th
CA1	39	28	50	32	9	70	9	8	32	16.5	16
CB1	47	35	60	38	16	75	11	14	36	19	18
CC1	47	39	68	42	14	92	13	16	54	26	18

*NOTE: **1-fall hoists**: The eye leans towards the back of the hoist. **2-fall hoists**: The eye leans towards the front of the hoist. This is marked with markings 'I' and "II" on the top of the hoist body.

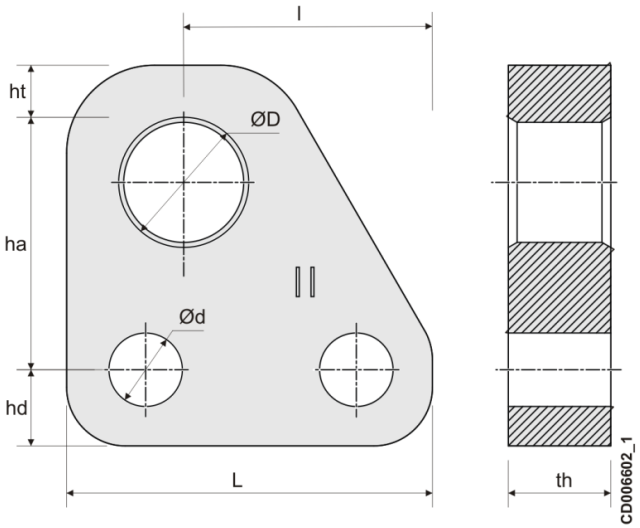

Figure 16. Eye suspension for frame sizes CD–CE

Frame size	Dimensions [mm]								
	L	l	D [ø]	d [ø]	hd	ha	ht	w	th
CD–CE	125	85	41	25.1	26	84.5	19.5	35	35

This document and the information contained herein, is the exclusive property of SWF Krantechnik GmbH and represents a non-public, confidential and proprietary trade secret that may not be reproduced, disclosed to third parties, altered or otherwise employed in any manner whatsoever without the express written consent of SWF Krantechnik GmbH. Copyright © (2013) SWF Krantechnik GmbH. All rights reserved.

5.7.2 Suspension hook

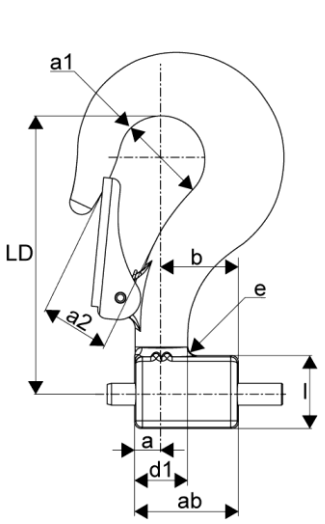

Figure 17. Suspension hook for frame sizes CA1–CB1

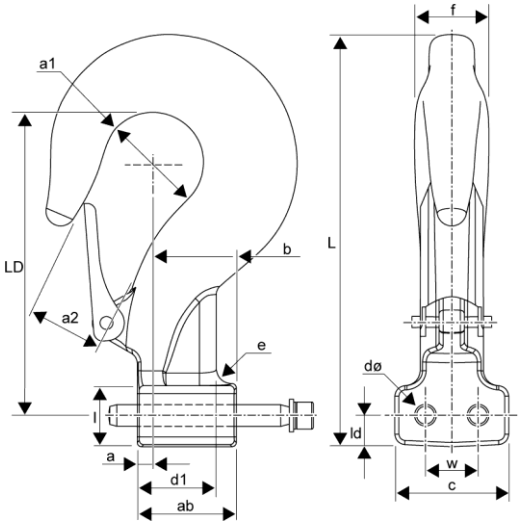

Figure 18. Suspension hook for frame size CC1

Frame size	Hook size [RSN]	Dimensions [mm]														
		a	ab	a_1	a_2 [1)]	b	c	d [ø] [2)]	d_1	e	f	l	ld	L	LD	w
CA1	020T	11	39	34	25	28	32	8.5	23	2	20	17	8.5	131	100	16.5
CB1	04T	12	47	40	30	35	35.5	10.5	24	4	25	33	15.5	172	127	19
CC1	08T	7.5	47	48	36	39.5	54	12.2	37.5	7	29	30	14	196	145	26

*NOTE: **1-fall hoists**: The hook opens towards the back of the hoist. **2-fall hoists**: The hook opens towards the front of the hoist. This is marked with markings 'I' and "II" on the top of the hoist body.

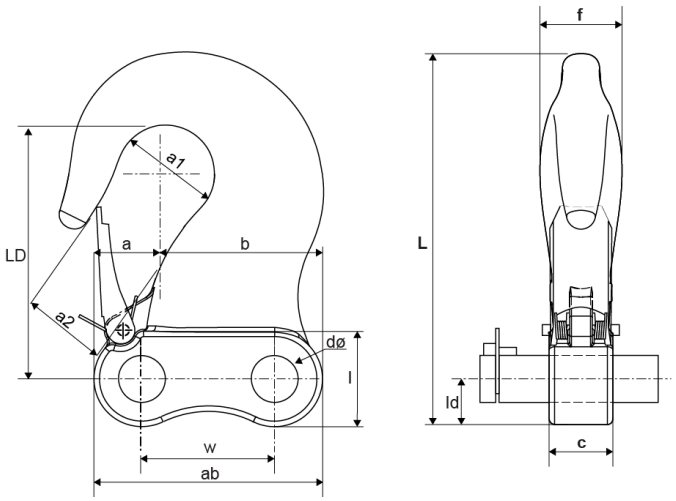

Figure 19. Suspension hook for frame sizes CD/CE

Frame size	Forging	Dimensions [mm]												
		a	ab	a_1	a_2 [1)]	b	c	d [ø] [2)]	f	l	ld	L	LD	w
CD–CE		39	124	53	41	85	35	25.1	45	51	26	204	138	72

[1)]The dimensions a_2 are given with the hook latch opened.

[2)]For the frame sizes CB1–CC1 and the CD–CE, the dimension 'd [ø]' is needed for both (x 2) pins.

This document and the information contained herein, is the exclusive property of SWF Krantechnik GmbH and represents a non-public, confidential and proprietary trade secret that may not be reproduced, disclosed to third parties, altered or otherwise employed in any manner whatsoever without the express written consent of SWF Krantechnik GmbH. Copyright © (2013) SWF Krantechnik GmbH. All rights reserved.

5.7.3 Coupling part

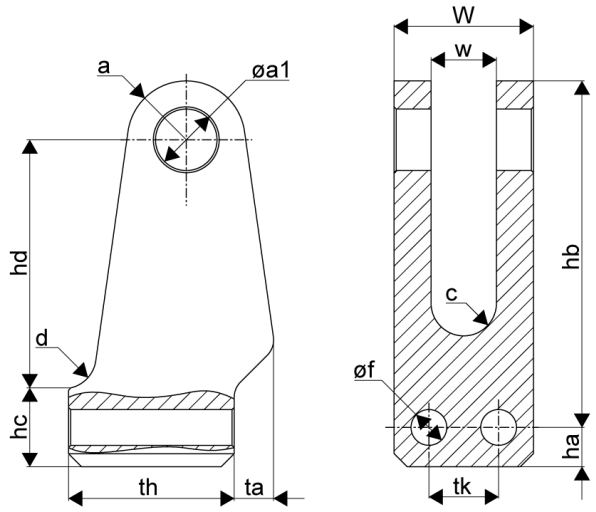

Figure 20. Coupling part for frame size CA1

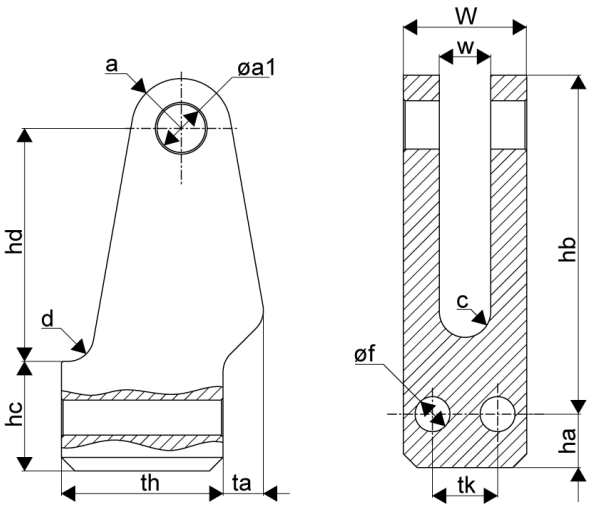

Figure 21. Coupling part for frame sizes CB1–CC1

Frame size	Dimensions [mm]													
	a [r]	a_1 [ø]	hc	hd	d	ha	hb	th	ta	W	w	c	tk	f [ø]
CA1	13.5	14.1	18	47	6	9	69.5	38	8	32	15	3	16.5	8.2
CB1	14.5	14.1	32	45	7.5	15.6	76	47	8	36	15	2	19	10.2
CC1	20	20.2	30	42.5	10	14.5	78	45	16	54	20	-	26	12.2

5.7.4 Stationary (fixed) suspension (option)

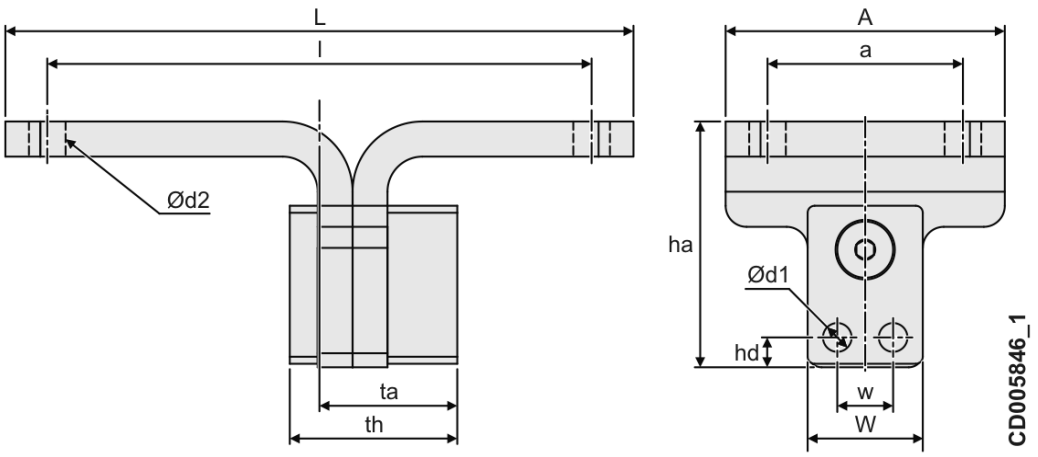

Frame size	Dimensions [mm]											
	ta	th	ha	hd	d_1 [ø]	w	W	d_2 [ø]	l	L	a	A
CA1	-	15	48	8.5	8 +0.1	-	15	9	39	63	22	40
CB1	39.5	48	70	8.5	8.2	16	33	10.5	156	180	56	80
CC1	42	47	85	14	12.2	26	54	17	120	180	80	115

This document and the information contained herein, is the exclusive property of SWF Krantechnik GmbH and represents a non-public, confidential and proprietary trade secret that may not be reproduced, disclosed to third parties, altered or otherwise employed in any manner whatsoever without the express written consent of SWF Krantechnik GmbH. Copyright © (2013) SWF Krantechnik GmbH. All rights reserved.

5.8 Lifting hooks

5.8.1 Lower hook

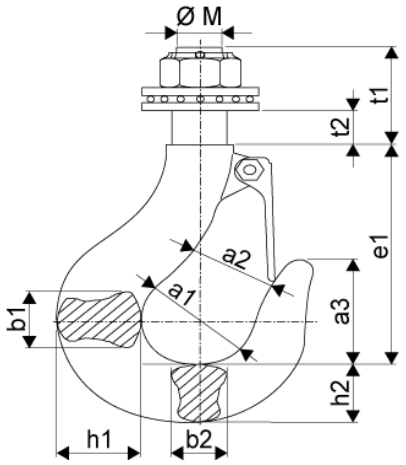

Figure 22. Lower hook for the frame sizes CA1–CC1

The hooks are designed according to the requirements of the DIN15401. The hook material is 34 CrMo 4 (standard hook) or AISI 316L (stainless steel hook).

Frame size	Reeving	Hook size [RSN]		Dimensions [mm]*										
		Std.	Stainl.	M [ø]	a_1 [2)]	a_2*	a_3	b_1	b_2	e_1	h_1	h_2	t_1	t_2
CA1	**1/1**	012T	025	12	30	22	34	19	15	71	22	19	32	10.5
CA1	**2/1**	020T	025	16	34	25	39	21	18	81	26	22	36	13.5
CB1	**1/1**	020T	025	16	34	25	39	21	18	81	26	22	36	13.5
CB1	**2/1**	05T	05	20	43	32	49	29	24	102	37	31	39	14.5
CC1	**1/1**	05T	05	20	43	32	49	29	24	102	37	31	39	14.5
	2/1	08T	1	20	48	36	54	35	29	115	44	37	43	14.5

[1)]The dimensions are valid for the standard hook type (not stainless steel)

[2)]The dimensions a_2 are given with the hook latch opened.

This document and the information contained herein, is the exclusive property of SWF Krantechnik GmbH and represents a non-public, confidential and proprietary trade secret that may not be reproduced, disclosed to third parties, altered or otherwise employed in any manner whatsoever without the express written consent of SWF Krantechnik GmbH. Copyright © (2013) SWF Krantechnik GmbH. All rights reserved.

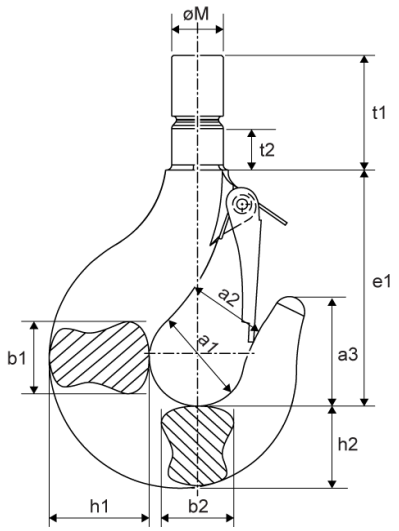

Figure 23. Lower hook for the frame sizes CD/CE

Frame size	Reeving	Hook size [RSN]	Dimensions [mm]										
			M [ø]	a_1	a_2 [1)]	a_3	b_1	b_2	e_1	h_1	h_2	t_1	t_2
CD	**1/1**	05V	20	43	32	49	29	24	102	37	31	39	13
CE	**1/1**	08V	24	48	36	54	35	29	115	44	37	55	20.5
CD	**2/1**	1V	-	50	41	57	38	32	120	48	40	59	29
CE	**2/1**	1.6V	30	55	43	64	45	38	1358	56	48	67	24.5

[1)]The dimensions a_2 are given with the hook latch opened.

This document and the information contained herein, is the exclusive property of SWF Krantechnik GmbH and represents a non-public, confidential and proprietary trade secret that may not be reproduced, disclosed to third parties, altered or otherwise employed in any manner whatsoever without the express written consent of SWF Krantechnik GmbH. Copyright © (2013) SWF Krantechnik GmbH. All rights reserved.

5.8.2 Safety hook / self-locking hook (option)

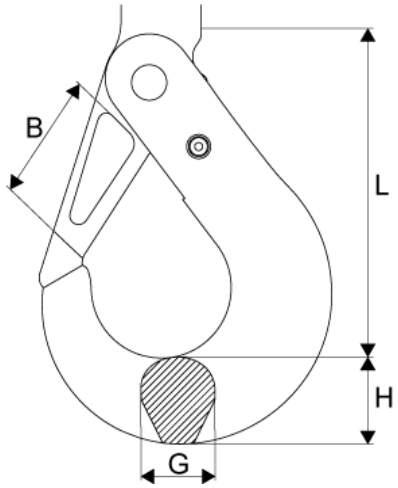

Figure 24. Safety hook

Hook type	Dimensions [mm]			
	L	B	G	H
BKT 6-10	90	29	15	21
BKT 7/8-10	111	37	17	26
BKT 10-10	133	45	21	30

Frame size	Falls	Hook type [BKT]	Influence to C-dimension [+mm]
CA1	1/1	6-10	16
CA1	2/1	6-10	7
CB1	1/1	6-10	3
CB1	2/1	7/8-10	7
CC1	1/1	7/8-10	5
CC1	2/1	10-10	13
CD	*		
CE	*		

*NOTE: Available through SWF support.

This document and the information contained herein, is the exclusive property of SWF Krantechnik GmbH and represents a non-public, confidential and proprietary trade secret that may not be reproduced, disclosed to third parties, altered or otherwise employed in any manner whatsoever without the express written consent of SWF Krantechnik GmbH. Copyright © (2013) SWF Krantechnik GmbH. All rights reserved.

5.8.3 Stainless steel hook

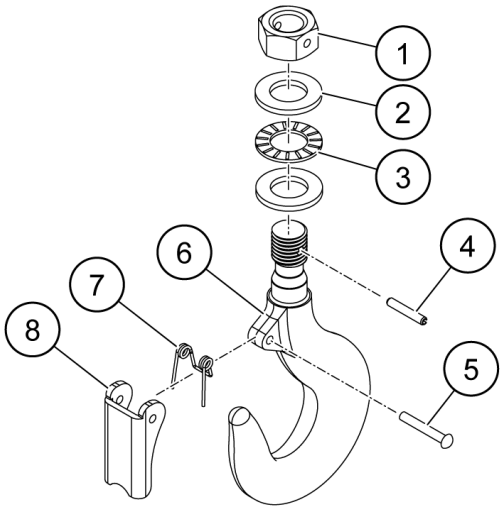

Figure 25. Stainless steel hook assembly

Pos.	Description	Stainless steel
1	Nut	X
2	Bearing	
3	Needle thrust bearing	
4	Rivet	X
5	Hook	X
6	Spring	X
7	Safety latch	X

*NOTE: The bearing and the needle thrust bearing of the stainless steel hook assembly are not available as stainless steel parts.

MAXIMUM LOAD

Maximum loads for stainless steel hook are offered according to the same rules as for the stainless steel chain.

Frame size	Falls	Max load [kg]	Hook type [RSN]
CA1	1/1	200	025
CA1	2/1	*	
CB1	1/1	320	025
CB1	2/1	*	
CC1	1/1	630	05
CC1	2/1	1250	1
CD	1/1	*	
CD	2/1	*	
CE	1/1	*	
CE	2/1	*	

*NOTE: Available at a later point of time.

This document and the information contained herein, is the exclusive property of SWF Krantechnik GmbH and represents a non-public, confidential and proprietary trade secret that may not be reproduced, disclosed to third parties, altered or otherwise employed in any manner whatsoever without the express written consent of SWF Krantechnik GmbH. Copyright © (2013) SWF Krantechnik GmbH. All rights reserved.

5.9 Hook blocks

The material of the hook block rubber part is Santoprene-8221.65.

5.9.1 Single fall hook blocks

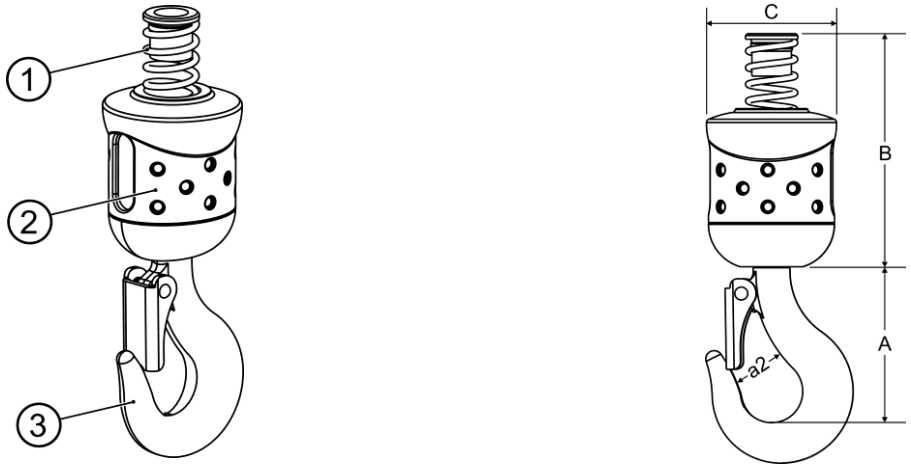

Figure 26. Single fall (1/1) hook block for frame sizes CA1–CC1

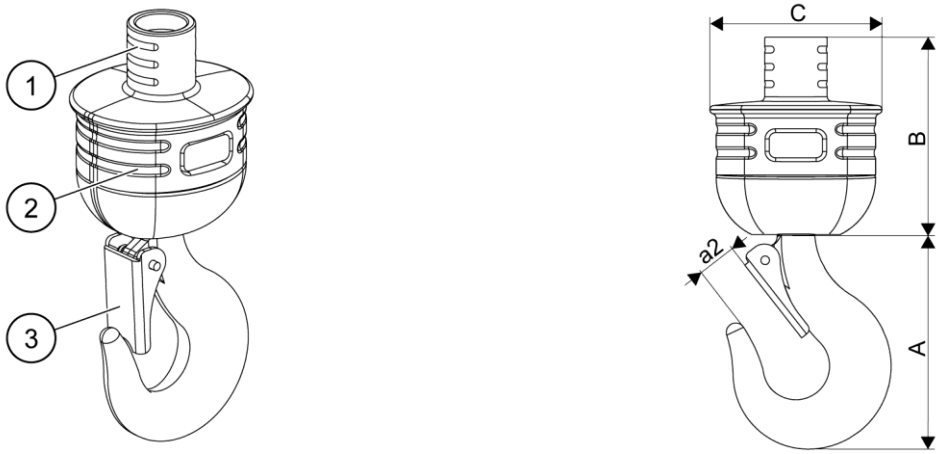

Figure 27. Single fall (1/1) hook block for frame sizes CD–CE

Pos.	Part
1	Limit switch activator
2	Grip area
3	Turnable hook with safety latch, axial needle bearings

DIMENSIONS:

Frame size	Reeving	Dimensions [mm]			
		A	B	C	a_2 [1)]
CA1	1/1	75	106	56	19
CB1	1/1	84	121	71	21
CC1	1/1	106	148	82	27
CD	1/1	137	126	110	16
CE	1/1	155.5	140	120	25

This document and the information contained herein, is the exclusive property of SWF Krantechnik GmbH and represents a non-public, confidential and proprietary trade secret that may not be reproduced, disclosed to third parties, altered or otherwise employed in any manner whatsoever without the express written consent of SWF Krantechnik GmbH. Copyright © (2013) SWF Krantechnik GmbH. All rights reserved.

5.9.2 Two-fall hook blocks

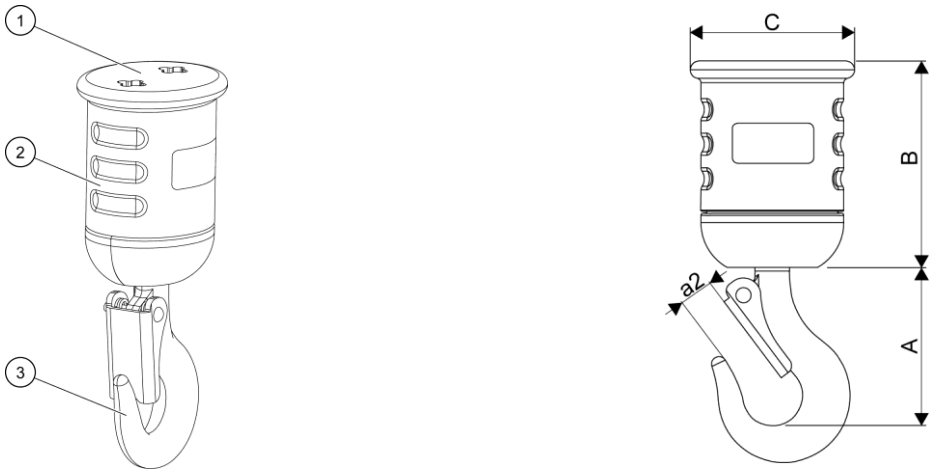

Figure 28. Two-fall (2/1) hook block for frame sizes CA1–CB1



Figure 29. Two-fall (2/1) hook block for frame size CC1

Pos.	Part
1	Limit switch activator
2	Grip area
3	Turnable hook with safety latch, axial needle bearings

DIMENSIONS:

Frame size	Reeving	Dimensions [mm]			
		A	B	C	a_2 [1)]
CA1	2/1	86	102	76	21
CB1	2/1	106	115	86	27
CC1	2/1	116	160	122	33

This document and the information contained herein, is the exclusive property of SWF Krantechnik GmbH and represents a non-public, confidential and proprietary trade secret that may not be reproduced, disclosed to third parties, altered or otherwise employed in any manner whatsoever without the express written consent of SWF Krantechnik GmbH. Copyright © (2013) SWF Krantechnik GmbH. All rights reserved.

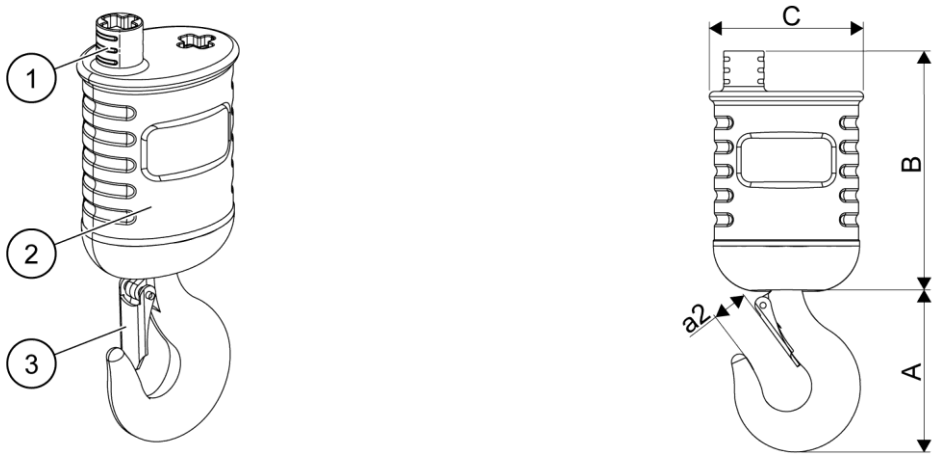

Figure 30. Two-fall (2/1) hook block for frame sizes CD–CE

Pos.	Part
1	Limit switch activator
2	Grip area
3	Turnable hook with safety latch, axial needle bearings

DIMENSIONS:

Frame size	Reeving	Dimensions [mm]			
		A	B	C	a_2 [1)]
CD	**1/1**	137	126	110	42.9
CE	**1/1**	155.5	140	120	48
CD	**2/1**	160	237	153	50
CE	**2/1**	186.5	270	176	55.6

[1)]The dimensions a_2 are given with the hook latch opened.

[2)]The stainless steel hook blocks have the same dimensions as the standard hook blocks.

This document and the information contained herein, is the exclusive property of SWF Krantechnik GmbH and represents a non-public, confidential and proprietary trade secret that may not be reproduced, disclosed to third parties, altered or otherwise employed in any manner whatsoever without the express written consent of SWF Krantechnik GmbH. Copyright © (2013) SWF Krantechnik GmbH. All rights reserved.

5.9.3 Stainless steel hook block (option)

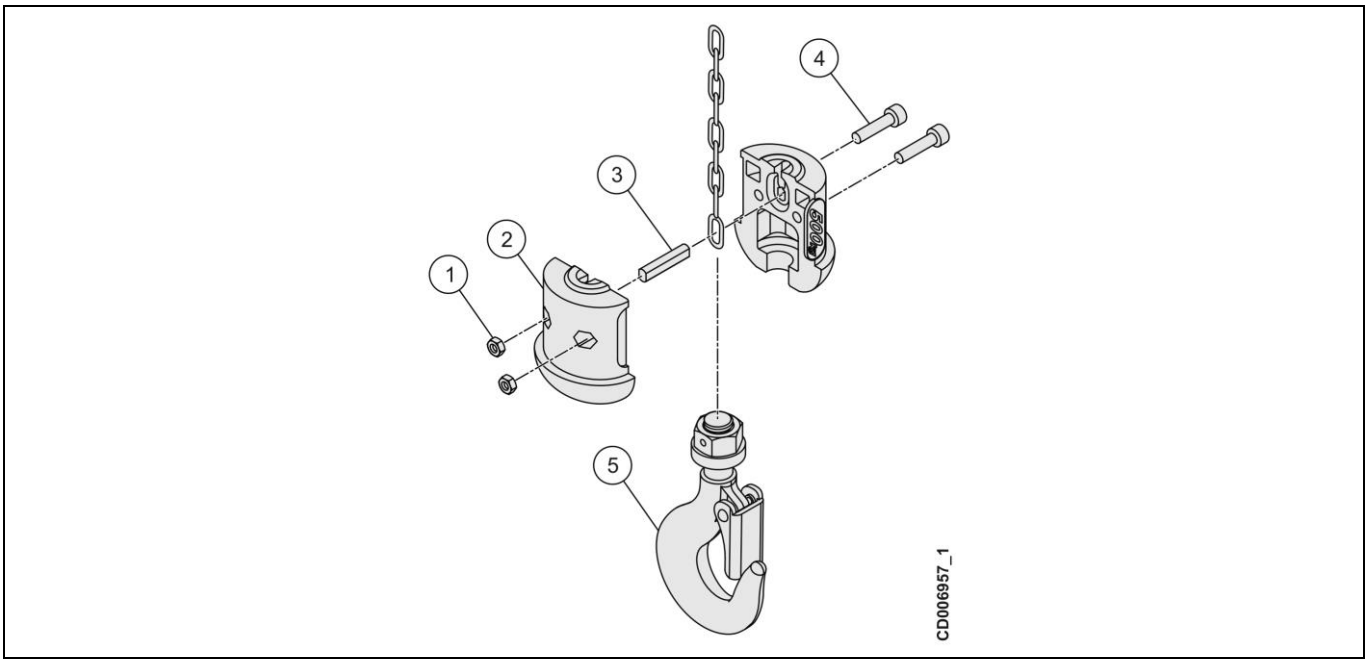

The material for the stainless steel hook block is AISI 316L.

Pos.	Description	Stainless steel
1	Nut	X
2	Hook bottle	X
3	Pin	
4	Screw	X
5	Hook	X

*NOTE: The pin (3) in the stainless steel hook block is not available as a stainless steel part.

This document and the information contained herein, is the exclusive property of SWF Krantechnik GmbH and represents a non-public, confidential and proprietary trade secret that may not be reproduced, disclosed to third parties, altered or otherwise employed in any manner whatsoever without the express written consent of SWF Krantechnik GmbH. Copyright © (2013) SWF Krantechnik GmbH. All rights reserved.

5.10 Hand control on hook feature (option)

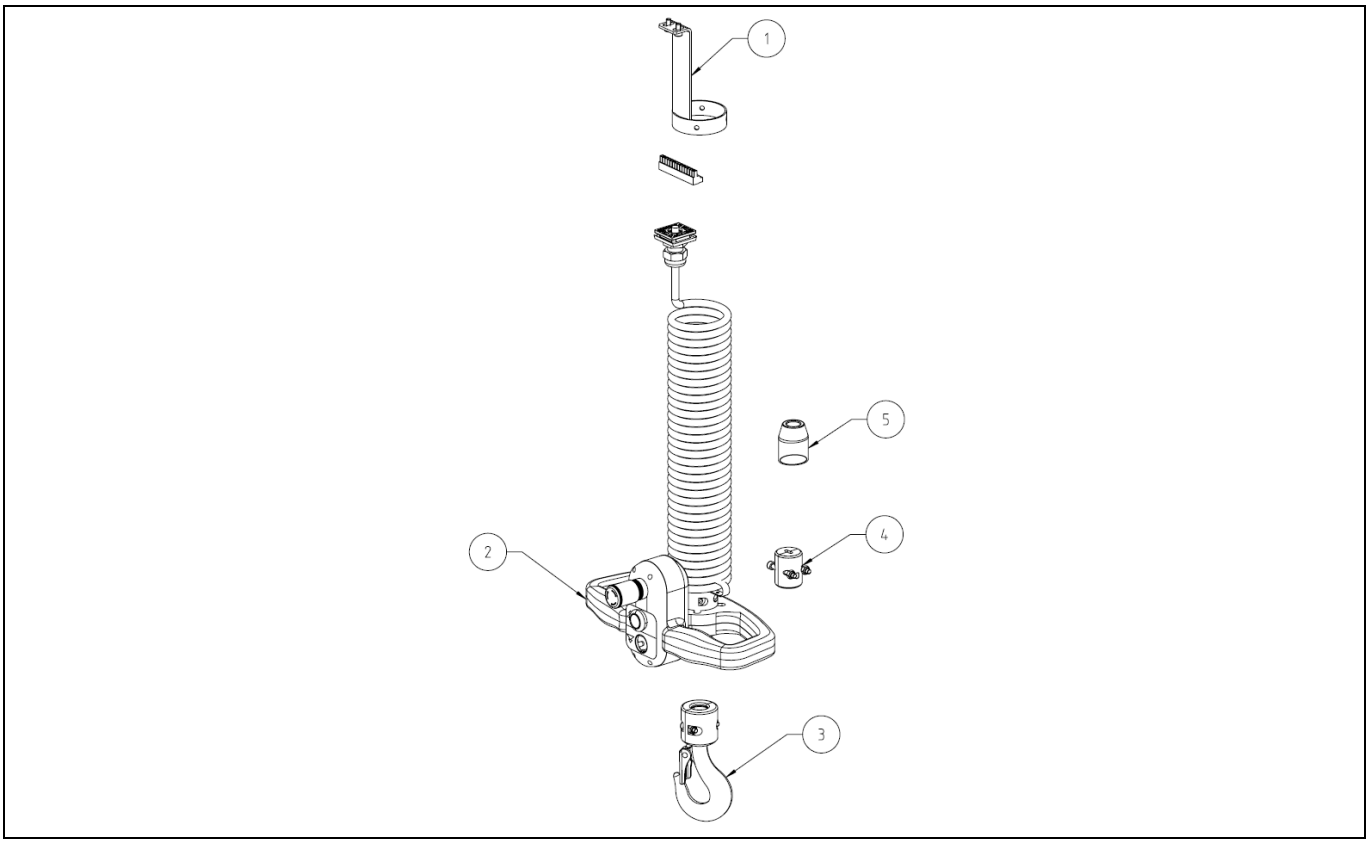

Pos.	Part
1	Fixing set
2	Push button unit
3	Hook assembly
4	Coupling set
5	Chain stop

Frame size	Max. load [kg]	Max.HOL [m]	C-dimension [mm]	
			Eye suspension	Hook suspension
CA1	320	5	866	917
CB1	500	5	885	937
CC1	*			
CD	*			
CE	*			

*NOTE: only CA1 and CB1

This document and the information contained herein, is the exclusive property of SWF Krantechnik GmbH and represents a non-public, confidential and proprietary trade secret that may not be reproduced, disclosed to third parties, altered or otherwise employed in any manner whatsoever without the express written consent of SWF Krantechnik GmbH. Copyright © (2013) SWF Krantechnik GmbH. All rights reserved.

5.11 Hoisting chains

5.11.1 Safety factors for chains

Frame size	Static safety factor
CA1	5 to 6.4
CB1	5 to 6.4
CC1	5 to 6.4
CD	6.4
CE	6.4

5.11.2 Chain technical data

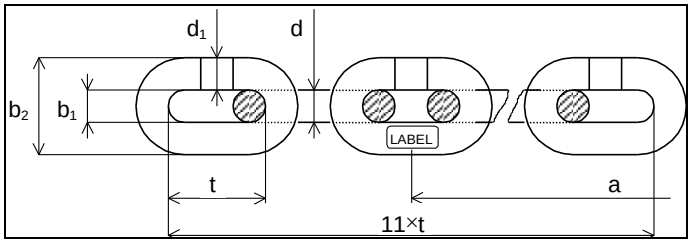

The load chain is marked with a label that contains information about the chain manufacturer and manufacturing date as well as the chain size and grade.

DIMENSIONS:

Chain size	Unit	CA1		CB1		CC1	
		4 x 11		5 x 14		7 x 20	
Diameter	d [mm]	4	+0.2 -0.2	5	+0.2 -0.2	7	+0.03 -0.03
Pitch	t [mm]	11	+0.15 -0.05	14	+0.2 -0.1	20	+0.25 -0.15
Control length	11 × t [mm]	121	+0.4 -0.2	154	+0.5 -0.25	220	+0.7 -0.35
Weld seam	d1 [mm],	4.3		5.4		7.5	
Internal width	b1 [mm],	4.8		6		8.4	
External width	b2 [mm],	13.6		16.8		23.6	
Label spacing	a [m], min.	0.22		0.3		0.4	
Label mark height	[mm]	1.5		1.8		2	
Weight	G [kg/m]	0.37		0.57		1.10	

Chain size	Unit	CD		CE	
		9 x 27		11.3 x 31	
Diameter	d [mm]	9	+0.3 -0.36	11.3	+0.1 -0.4
Pitch	t [mm]]	27	+0.3 -0.2	31	+0.4 -0.2
Control length	11 × t [mm]	297	+0.75 -0.4	341	+1.1 -0.5
Weld seam	d1 [mm],	9.7		12	
Internal width	b1 [mm],	10.8		12.6	
External width	b2 [mm],	30.4		36.6	
Label spacing	a [m], min.	1		1	
Label mark height	[mm]	3.0		3.0	
Weight	G [kg/m]	1.77		2.81	

This document and the information contained herein, is the exclusive property of SWF Krantechnik GmbH and represents a non-public, confidential and proprietary trade secret that may not be reproduced, disclosed to third parties, altered or otherwise employed in any manner whatsoever without the express written consent of SWF Krantechnik GmbH. Copyright © (2013) SWF Krantechnik GmbH. All rights reserved.

TECHNICAL CHARACTERISTICS:

Chain size	Unit	CA1		CB1		CC1	
		4 x 11		5 x 14		7 x 20	
		Standard	Stainless	Standard	Stainless	Standard	Stainless
Cross section	A [mm²]	25.12	25.12	39.25	39.25	76.93	76.93
Max. working load	mSWP [kg]	320	250	630	400	1250	800
Stress at max. working load	σ [MPa]	125	97.6	157.5	100	159.4	102
Test force	Fm [kN]	12.6	8	20	12.5	40	25
Min. breaking force	FB [kN]	20.10	12.5	32	20.0	61.6	40.0
Min. breaking elongation	A [%]	10	15	10	15	10	15
Min. surface hardness	[HV]	380HV10	180HV5	380HV10	180HV5	380HV10	180HV5
Corrosion protection		zinc plated		zinc plated		zinc plated	
Grade		80	50	80	50	80	50
Class		T	P	T	P	T	P

Chain size	Unit	CD		CE	
		9 x 27		11.3 x 31	
		Standard	Stainless	Standard	Stainless
Cross section	A [mm²]	127.17	127.17	200.52	200.52
Max. working load	mSWP [kg]	1600	1000	2500	1600
Stress at max. working load	σ [MPa]	125 (M5) 160 (M3)	77.14	125 (M5) 160 (M3)	78.3
Test force	Fm [kN]	63	40	100	64
Min. breaking force	FB [kN]	100	63	160	100
Min. breaking elongation	A [%]	10	15	10	15
Min. surface hardness	[HV]	380HV10	250HV10	380HV10	180HV10
Corrosion protection		zinc plated		zinc plated	
Grade		80	50	80	50
Class		T	P	T	P

This document and the information contained herein, is the exclusive property of SWF Krantechnik GmbH and represents a non-public, confidential and proprietary trade secret that may not be reproduced, disclosed to third parties, altered or otherwise employed in any manner whatsoever without the express written consent of SWF Krantechnik GmbH. Copyright © (2013) SWF Krantechnik GmbH. All rights reserved.

5.11.3 Chain bags

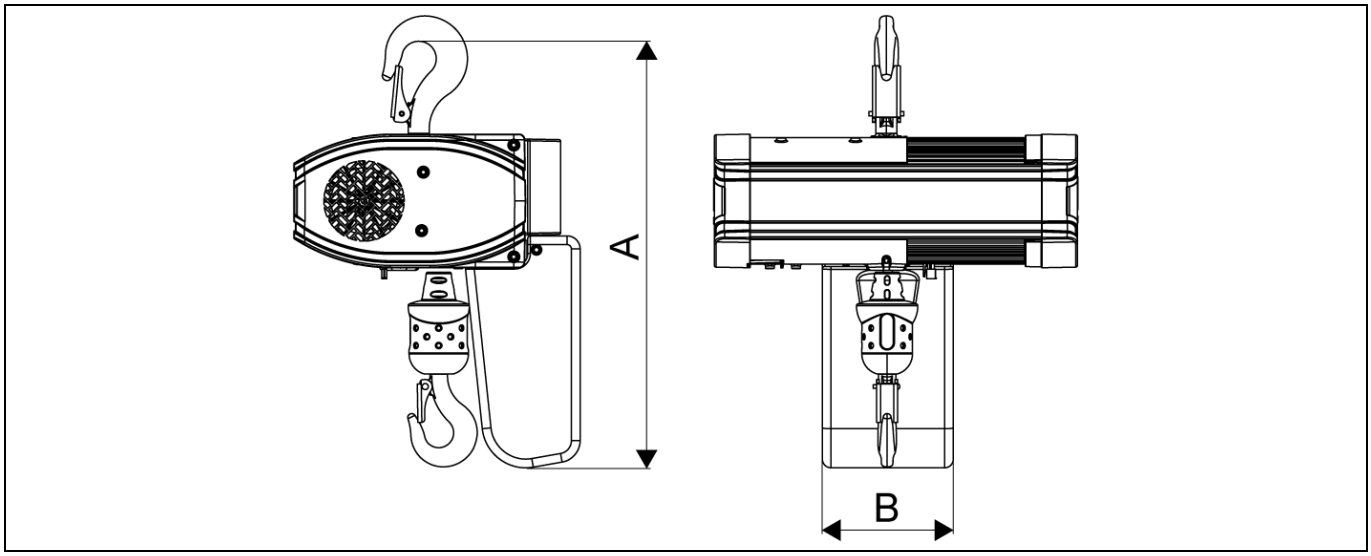

DIMENSIONS:

Frame size	Bag capacity [m]	Chain size	Dimensions [mm]	
			A	B
CA1	6	4 x 11	404	145
CA1	16	4 x 11	504	149
CA1	35	4 x 11	654	149
CB1	6	5 x 14	489	160
CB1	16	5 x 14	554	164
CB1	25	5 x 14	674	164
CC1	6	7 x 20	570	200
CC1	16	7 x 20	711	204
CC1	30	7 x 20	781	204
CD	12	9 x 27	730	290
CD	30	9 x 27	942	300
CE	12	11.3 x 31	809	300
CE	30	11.3 x 31	948	300

*NOTE: The dimensions are valid for hoists equipped with a single fall reeving.

CHARACTERISTICS:

Material	High-density polyethylene
Weight	0.93 to 0.97 g/cm^3
Wall thickness	3 mm [0.12 in]
Max. temp	110 °C [230F]
Color	Black

This document and the information contained herein, is the exclusive property of SWF Krantechnik GmbH and represents a non-public, confidential and proprietary trade secret that may not be reproduced, disclosed to third parties, altered or otherwise employed in any manner whatsoever without the express written consent of SWF Krantechnik GmbH. Copyright © (2013) SWF Krantechnik GmbH. All rights reserved.

5.12 Traveling motors

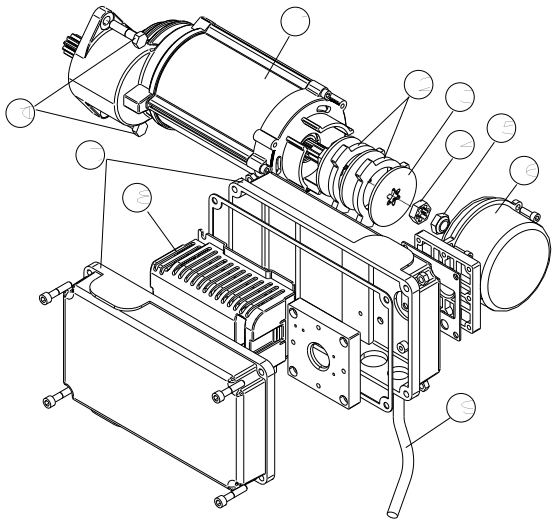

Three different inverter drive units are used as standard for the varying chain hoist applications.

The frequency converter TravelMaster 4 is mounted on the side of the unit and is connected with a plug to the chain hoist.

The FNU 2 is also available as a 2-speed motor version.

Speed control	Gearless drive	Geared drive
Inverter	FNU 1 (150 W)	FNU 2 (300 W)
Inverter		FNU 3 (400 W)
2-speed		FNU 2 50Hz: 300/50 W 60Hz: 370/70 W

Pos.	Part
1	Gear/motor unit
2	Brake friction discs
3	Brake disc
4	Aluminum ring
5	Adjustment nut
6	Motor cover
7	Electric box
8	Frequency converter
9	Connecting cable
10	Fixing screws

This document and the information contained herein, is the exclusive property of SWF Krantechnik GmbH and represents a non-public, confidential and proprietary trade secret that may not be reproduced, disclosed to third parties, altered or otherwise employed in any manner whatsoever without the express written consent of SWF Krantechnik GmbH. Copyright © (2013) SWF Krantechnik GmbH. All rights reserved.

5.12.1 Inverter motor data

	Inverter motors							
	Standard						Options	
	TMU 1 [35Hz]		TMU 2 [100Hz]		TMU 3 [100Hz]		TMU 2	TMU 2
	LS	HS	LS	HS	LS	HS	LS	HS
Traveling speed [m/min.]	4	20	2	10	1.6	8.3	4	16
	...	...	...	...	...	...	...	...
	20	44	10	20	8.3	16.7	16	32
							Max. 5000 kg	
Maximum load [kg]	1000		5000		10 000		-	
ED %	40		40		40		-	
Starts	240		240		240		-	
Current [A]	In = 1.1		In = 1.2		In = 1.8		-	
	Id = 2.3		Id = 4.2		Id = 8.2			
Power [W]	150		300		450		-	
Cos φ	0.5		0.57		0.52		-	
RPM	965		2855		2850		-	
Frequency [Hz]	50…60		50…60		50…60		-	
Power supply [Vac]	380…480		380…480				208/220/230/525/575/600/690	
Control voltage [Vac]	48		48		48		115/230	
End limit switches	-		-		-		Yes	
Slow down switches	-		-		-		Yes (MS mode only)	
Thermal protection	-		-		-		Yes	
IP protection	55		55		55		Reinforced	
Tropicalization [%]	95		95		95		-	
Ambient temperature [°C]	-10 °C to +40 °C		-10 °C to +40 °C		-10 °C to +40 °C		-	
Standby heaters	-		-		-		Yes	
Motor class	H		H		H		-	
Alone (low volt. cubicle)	-		-		-		Yes	

Abbreviations	
In	Nominal current
Id	Starting current

This document and the information contained herein, is the exclusive property of SWF Krantechnik GmbH and represents a non-public, confidential and proprietary trade secret that may not be reproduced, disclosed to third parties, altered or otherwise employed in any manner whatsoever without the express written consent of SWF Krantechnik GmbH. Copyright © (2013) SWF Krantechnik GmbH. All rights reserved.

5.12.2 Two-speed motor data

	2-speed motors		
	TMU 2		
	Standard [50Hz]		Options
Traveling speed [m/min.]	**LS**	**HS**	**-**
	5	20	-
Maximum load [kg]	5000		-
ED %	40		-
Starts	240		-
Current [A]	In = 1.0	In = 0.8	-
	Id = 3.5	Id = 1.0	
Power [W]	300	50	-
Cos φ	0.70	0.77	-
RPM	2800	690	-
Frequency [Hz]	50		-
Power supply [Vac]	400		208/220/230/525/575/600/690
Control voltage [Vac]	48		115
End limit switches	-		-
Slow down switches	-		-
Thermal protection	-		Yes
IP protection	55		Reinforced
Tropicalization [%]	95		-
Ambient temperature [°C]	-10 °C to +40 °C		-
Standby heaters	-		Yes
Motor class	H		-

Abbreviations	
In	Nominal current
Id	Starting current

This document and the information contained herein, is the exclusive property of SWF Krantechnik GmbH and represents a non-public, confidential and proprietary trade secret that may not be reproduced, disclosed to third parties, altered or otherwise employed in any manner whatsoever without the express written consent of SWF Krantechnik GmbH. Copyright © (2013) SWF Krantechnik GmbH. All rights reserved.

5.13 Trolley constructions

5.13.1 Trolley fixation types

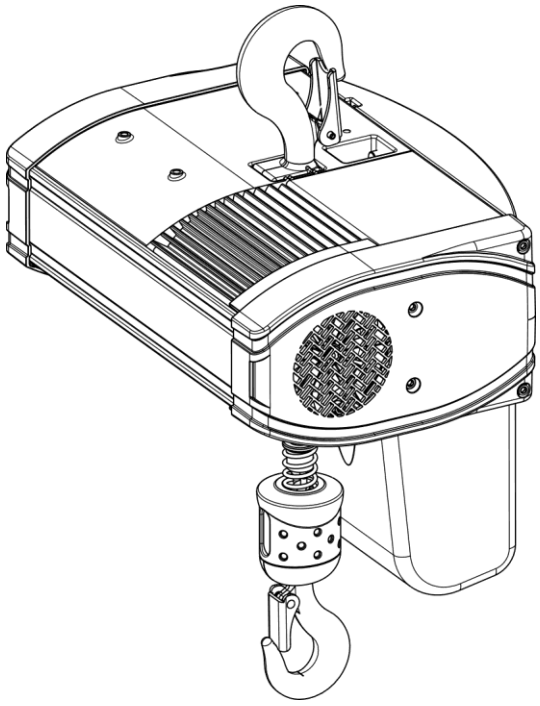

Figure 31. ***Suspension hook***

The fixation with the suspension hook is used in hook suspended hoist models, with fixed hoist positions, and in hoists equipped with a push trolley.

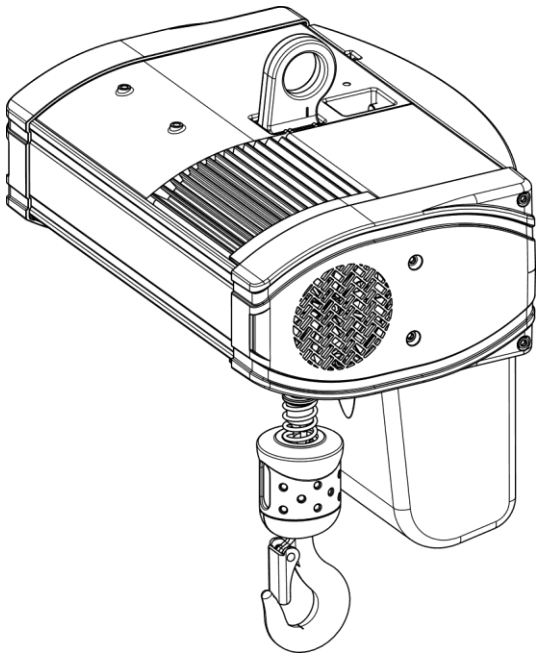

Figure 32. ***Eye suspension***

The fixation with the eye suspension is used e.g. with hoists attached to a Light crane system profile.

This document and the information contained herein, is the exclusive property of SWF Krantechnik GmbH and represents a non-public, confidential and proprietary trade secret that may not be reproduced, disclosed to third parties, altered or otherwise employed in any manner whatsoever without the express written consent of SWF Krantechnik GmbH. Copyright © (2013) SWF Krantechnik GmbH. All rights reserved.

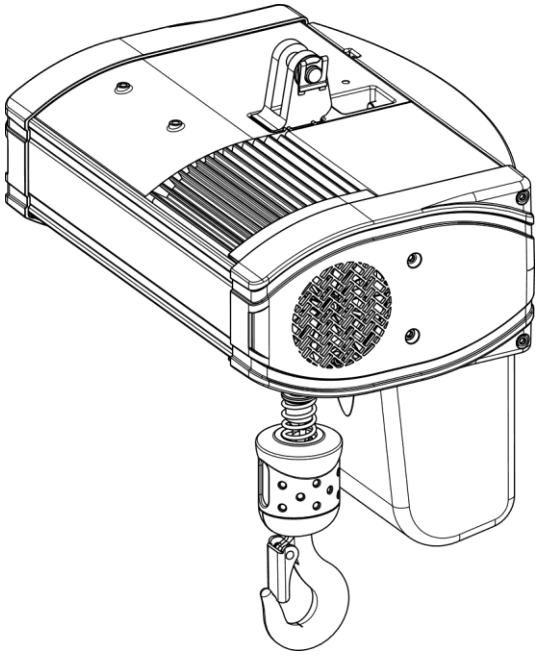

Figure 33. Coupling part

The fixation of the trolley with the coupling part is used with the motor trolley solutions.

This document and the information contained herein, is the exclusive property of SWF Krantechnik GmbH and represents a non-public, confidential and proprietary trade secret that may not be reproduced, disclosed to third parties, altered or otherwise employed in any manner whatsoever without the express written consent of SWF Krantechnik GmbH. Copyright © (2013) SWF Krantechnik GmbH. All rights reserved.

5.13.2 Trolley constructions

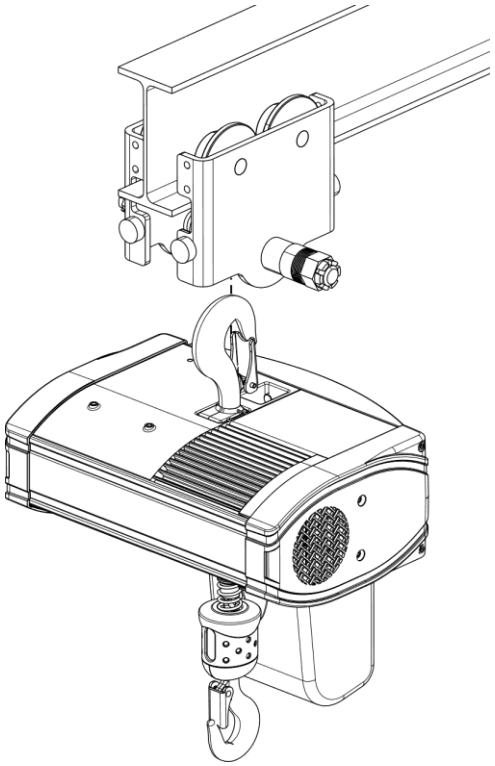

Figure 34. Push trolley hoist

In the push trolley applications, the the hoist is attached to the push trolley with a suspension hook.

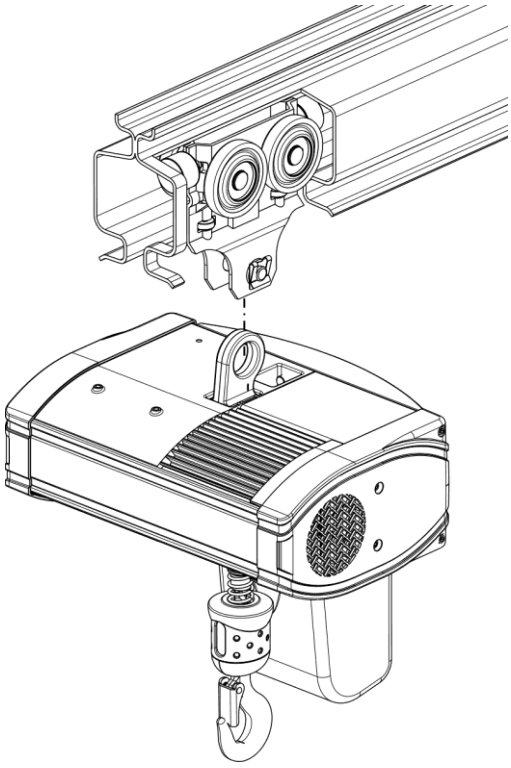

Figure 35. Push trolley inside hollow (LCS) profile

In the Light crane system solutions, the hoist is attached to the trolley with an eye suspension.

This document and the information contained herein, is the exclusive property of SWF Krantechnik GmbH and represents a non-public, confidential and proprietary trade secret that may not be reproduced, disclosed to third parties, altered or otherwise employed in any manner whatsoever without the express written consent of SWF Krantechnik GmbH. Copyright © (2013) SWF Krantechnik GmbH. All rights reserved.

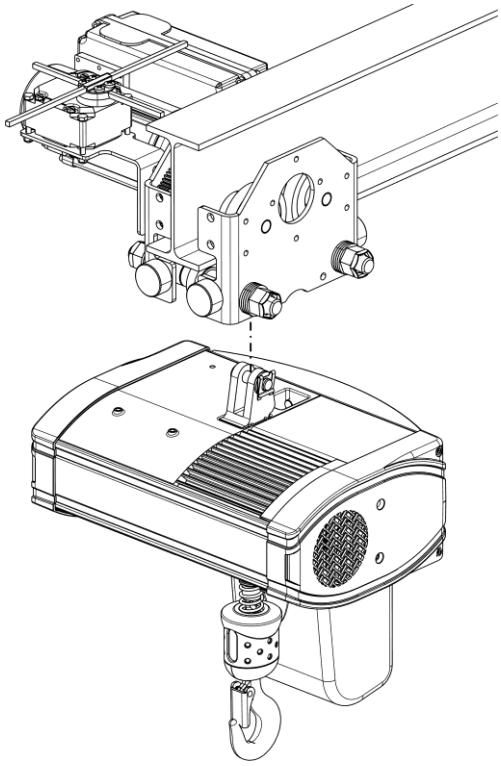

Figure 36. Normal headroom trolley

The normal headroom motor trolley is the standard trolley solution in environments with no special limitations in the hoist headroom area. The hoist is attached to the trolley with a coupling part fixation. The normal headroom trolley version will be replaced later with the compact motor trolley solution.

This document and the information contained herein, is the exclusive property of SWF Krantechnik GmbH and represents a non-public, confidential and proprietary trade secret that may not be reproduced, disclosed to third parties, altered or otherwise employed in any manner whatsoever without the express written consent of SWF Krantechnik GmbH. Copyright © (2013) SWF Krantechnik GmbH. All rights reserved.

6 LUBRICATION

6.1 Lubrication charts

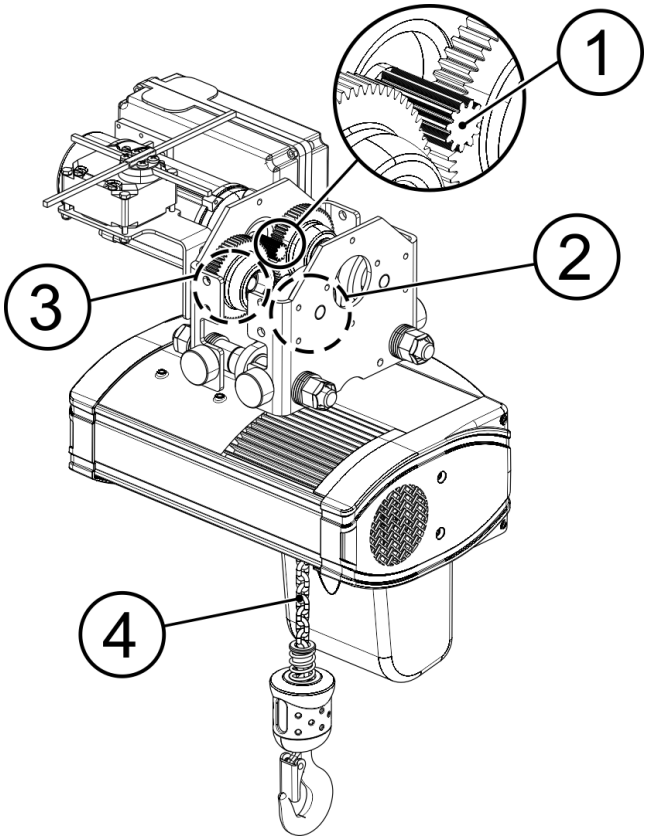

Pos.	Component	Intervals
1	Secondary/output shaft (traveling transmission)	Annual
2	Hoisting transmission	Lubricated for the designed working period of the product
3	Traveling wheel bearings	Lubricated for the designed working period of the product
4	Chain	From 1 week – up to a year (depending on the usage)

This document and the information contained herein, is the exclusive property of SWF Krantechnik GmbH and represents a non-public, confidential and proprietary trade secret that may not be reproduced, disclosed to third parties, altered or otherwise employed in any manner whatsoever without the express written consent of SWF Krantechnik GmbH. Copyright © (2013) SWF Krantechnik GmbH. All rights reserved.

6.2 Lubricant information

1

Traveling transmission (secondary/output shaft)

- Requires lubrication annually. Remove the plug and grease the open transmission.

Installation	Trade name and number	Quantity
Factory installed	MOBILITH SHC 460	7.5 cl

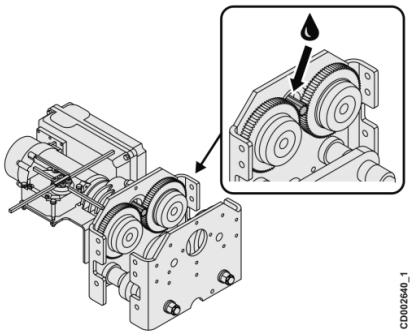

2

Hoisting transmission (gear)

- Lubricated with oil. Lubrication will last for the designed working period of the hoist.

Installation	Trade name and number	Quantity
Factory installed	Dexron III	Lubricated for the designed working period of the hoist*

*NOTE: If you need to add lubricant for the hoisting transmission, see the table below for the correct fill amount.

Frame size	Quantity of oil needed [l]
CA1	0.25
CB1	0.23
CC1	0.6
CD	1.6
CE	2.0

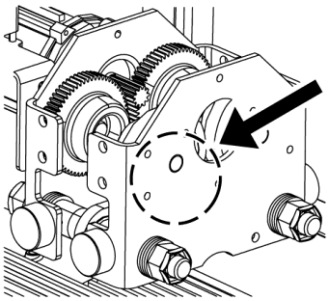

- Available as an option: Food industry oil.

Installation	Trade name and number	Quantity
Factory installed	Klüberoil 4 UH1- 220 N	See table

Frame size	Quantity of oil needed [l]
CA1	0.25
CB1	0.23
CC1	0.6
CD	2.0
CE	2.5

This document and the information contained herein, is the exclusive property of SWF Krantechnik GmbH and represents a non-public, confidential and proprietary trade secret that may not be reproduced, disclosed to third parties, altered or otherwise employed in any manner whatsoever without the express written consent of SWF Krantechnik GmbH. Copyright © (2013) SWF Krantechnik GmbH. All rights reserved.

4 **Chain**

- Lubricate the chain before first run and after that when needed.
- The lubrication interval varies from a minimum of one week to one year, depending on the usage.

Installation	Trade name and number	Quantity
Lubricate before 1st run	Renolit LZR 000	As required

- Available as an option: Oil lubricant.

Installation	Trade name and number	Quantity
Lubricate before 1st run	Mobil Gear 632	As required

- Available as an option: Food industry oil.

Installation	Trade name and number	Quantity
Lubricate before 1st run	Exalub AL 46	As required

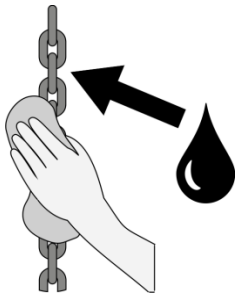

This document and the information contained herein, is the exclusive property of SWF Krantechnik GmbH and represents a non-public, confidential and proprietary trade secret that may not be reproduced, disclosed to third parties, altered or otherwise employed in any manner whatsoever without the express written consent of SWF Krantechnik GmbH. Copyright © (2013) SWF Krantechnik GmbH. All rights reserved.

7 LIST OF MATERIALS AND COATINGS

MATERIALS:

Part	Fabrication	Material type	Norm
Frame	Pressure die casted aluminum alloy	GD-AlSi9CU3	EN AC – AlSi9Cu3
Suspension hook	Forged steel	34CrNiMo6	EN10250-3
Suspension eye	Machined plate	S355J2	EN-GJS-500-7
Covers	Pressure die casted aluminum alloy	GD-AlSi9CU3	EN AC – AlSi9Cu3
Profiles	Extruded aluminum alloy	AlMg0.7Si	EN AW - 6063
Gear wheels	Alloy steel	20NiCrMo2-2 / 16MNCr5	EN 10060
Chain bucket	High-density polyethylene	PEHD BLACK	
Hooks	Forged steel	34CrMo4	EN 10083
Hook blocks	Pressure die casted aluminum	GD-AlSi9CU3	EN AC – AlSi9Cu3
Chains	Bended and welded alloy steel	Special steel	EN 818-7
Rubber parts	Molded neoprene	Santoprene / Geolast	
Wheels	Forged steel, casted iron	C40 and GJS-700-2	EN 10060

LUBRICANTS:

Component	Lubricant
Traveling transmission	MOBILITH SHC 460
Hoisting transmission (gear)	Dexron III / Klüberoil 4 UH1- 220 N
Chain	Grease: Renolit LZR 000
	Oil: Mobil Gear 632 / Exalub AL 46

COATINGS:

Component	Lubricant
Aluminum alloy components	Epoxy polyester powder painting (70 µm)
Steel components	C2-M painting
Chain	Zinc plating

COLOR CODES:

	Color code				
Component	Konecranes	Verlinde	SWF	R&M	Stahl
Body	RAL 7021	RAL 7021	RAL 7021	RAL 7021	RAL 7021
Frame cover	NCS-S0585-Y80R	DZ2369	RAL 9006	RAL 2021	RAL 6018
Hook	RAL 1021	RAL 1021	RAL 1021	RAL 1021	RAL 1021

This document and the information contained herein, is the exclusive property of SWF Krantechnik GmbH and represents a non-public, confidential and proprietary trade secret that may not be reproduced, disclosed to third parties, altered or otherwise employed in any manner whatsoever without the express written consent of SWF Krantechnik GmbH. Copyright © (2013) SWF Krantechnik GmbH. All rights reserved.

8 LOAD RANGE AND DUTY CLASSES

8.1 Hoist classifications

The mechanism group – M4, M5, or M6 – of an electric chain hoist depends on the operating time per working day and on the class of load spectrum.

The hoist operating time (O_t) can be calculated by using the following formula:

$$O_t = \frac{2 \times HOL(m) \times \text{No. of cycles} \left(\frac{1}{h}\right) \times \text{working time} \left(\frac{h}{day}\right)}{60 \left(\frac{min}{h}\right) \times \text{lifting speed} \left(\frac{m}{min}\right)}$$

The actual load spectrum factor can be calculated using the following schema:

Load %	Lifting time %		Factor k^3		Load spectrum factor
100%		*	1	=	
+					
80%		*	0.51	=	
+					
60%		*	0.22	=	
+					
40%		*	0.06	=	
+					
20%		*	0.01	=	
+					
0%		*	0	=	
=					
Sum:	100%			Sum:	
			Divide by 100:		/100 =
			Load spectrum factor, k_m:		

Class of load spectrum	Load spectrum k_m
L1	$k_m \leq 0.125$
L2	$0.125 < k_m \leq 0.250$
L3	$0.250 < k_m \leq 0.500$
L4	$0.500 < k_m \leq 1$

This document and the information contained herein, is the exclusive property of SWF Krantechnik GmbH and represents a non-public, confidential and proprietary trade secret that may not be reproduced, disclosed to third parties, altered or otherwise employed in any manner whatsoever without the express written consent of SWF Krantechnik GmbH. Copyright © (2013) SWF Krantechnik GmbH. All rights reserved.

LOAD SPECTRUM CLASSES:

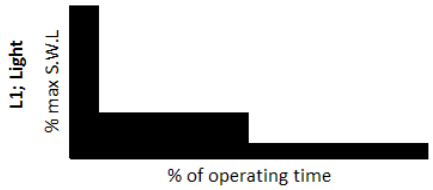

L1 Light

Mainly operated at very low loads and in exceptional cases at maximum loads.

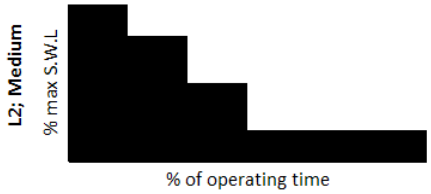

L2 Medium

Operated continually at low loads and frequently at maximum loads.

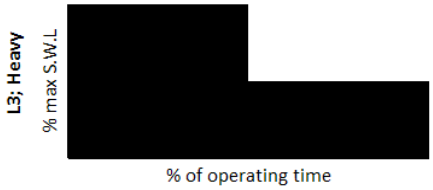

L3 Heavy

Operated continually at medium loads and frequently at maximum loads.

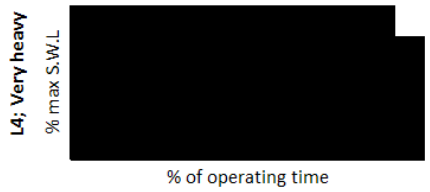

L4 Very heavy

Operated regularly at maximum and at almost maximum loads.

Load spectrum		Average operating time per working day [hrs]			
L1	Light	≤ 2	≤ 4	4 - 8	8 - 16
L2	Medium	≤ 1	≤ 2	2 - 4	4 - 8
L3	Heavy	≤ 0.5	≤ 1	1 - 2	2 - 4
L4	Very heavy	≤ 0.25	≤ 0.5	0.5 - 1	1 - 2
FEM/ISO rating			1Bm/M3	1Am/M4	2m/M5

The following table shows the theoretical service lifetime for ISO ratings M3, M4, M5, and M6:

Load spectrum		Theoretical service life [hrs]			
L1	Light	3150	6300	12500	25000
L2	Medium	1600	3200	6300	12500
L3	Heavy	800	1600	3200	6300
L4	Very heavy	400	800	1600	3200
FEM/ISO rating		1Bm/M3	1Am/M4	2m/M5	3m/M6

This document and the information contained herein, is the exclusive property of SWF Krantechnik GmbH and represents a non-public, confidential and proprietary trade secret that may not be reproduced, disclosed to third parties, altered or otherwise employed in any manner whatsoever without the express written consent of SWF Krantechnik GmbH. Copyright © (2013) SWF Krantechnik GmbH. All rights reserved.